Kraus & Naimer

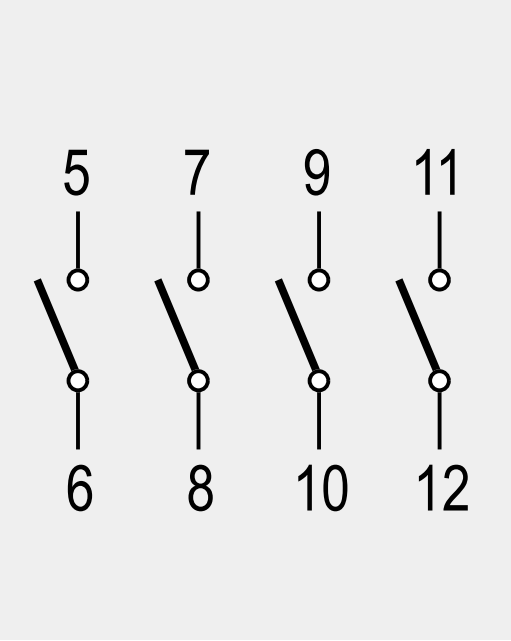

# Switch Wiring Diagrams

## POCKETBOOK

Kraus & Naimer

# Switch Wiring Diagrams

## POCKETBOOK

This pocketbook has been compiled to assist our customers in the selection of our most commonly used cam switches. It contains Kraus & Naimer standard contact arrangements for C-, CA-, CG- and CH-series cam switches.

For details on special or non-standard switches, please contact our local sales office.

# Contents


| ON/OFF Switches 0-1 | | Code-no. | Stages C/CG/CH | Page |
|---|---|---|---|---|
| 60° Switching | 1 pole | A200 | 1 | 32 |
| | 2 pole | A201 | 1 | 32 |
| | 3 pole | A202 | 2 | 32 |
| | 4 pole | A203 | 2 | 32 |
| | 5 pole | WAA341 | 3 | 56 |
| | 6 pole | A342 | 3 | 56 |
| | 7 pole | A343 | 4 | 56 |
| | 8 pole | A344 | 4 | 56 |
| | 9 pole | WAA345 | 5 | 56 |
| | 10 pole | A346 | 5 | 56 |
| | 11 pole | WAA347 | 6 | 56 |
| | 12 pole | A348 | 6 | 56 |
| 90° Switching | 1 pole | A290 | 1 | 45 |
| | 2 pole | A291 | 1 | 45 |
| | 3 pole | A292 | 2 | 45 |
| | 4 pole | A324 | 2 | 54 |
| 4. Pole preclose 30° | 4 pole | A293 | 2 | 45 |
| | 5 pole | A325 | 3 | 54 |
| | 6 pole | A326 | 3 | 54 |
| 30° Switching with spring return | 1 pole | A204 | 1 | 32 |
| | 2 pole | A205 | 1 | 32 |
| | 3 pole | WAA206 | 2 | 32 |
| | 4 pole | WAA207 | 2 | 32 |
| **Double-throw Switches** without „OFF" Positions (1-2) 60° Switching | 1 pole | A220 | 1 | 36 |
| | 2 pole | A221 | 2 | 36 |
| | 3 pole | A222 | 3 | 36 |
| | 4 pole | A223 | 4 | 36 |
| | 5 pole | A369 | 5 | 58 |
| | 6 pole | A370 | 6 | 58 |
| | 7 pole | A371 | 7 | 58 |
| | 8 pole | A372 | 8 | 58 |
| | 9 pole | WAA373 | 9 | 58 |
| | 10 pole | WAA374 | 10 | 58 |
| | 11 pole | WAA375 | 11 | 58 |
| | 12 pole | WAA376 | 12 | 58 |

# Contents


| Double-throw Switches | | Code-no. | Stages C/CG/CH | Page |
|---|---|---|---|---|
| without „OFF“ (1-2) | 1 pole | A720 | 1 | 83 |
| with electrically | 2 pole | A721 | 2 | 83 |
| isolated contacts | 3 pole | A722 | 3 | 83 |
| | 4 pole | A723 | 4 | 83 |
| without „OFF“ | 1 pole | A295 | 1 | 47 |
| with spring return | 2 pole | A296 | 2 | 47 |
| 30° Switching | 3 pole | WAA297 | 3 | 47 |
| with electrically isolated contacts | 1 pole | A795 | 1 | 86 |
| with „OFF“ | 1 pole | A210 | 1 | 33 |
| Positions (1-0-2) | 2 pole | A211 | 2 | 33 |
| 60° Switching | 3 pole | A212 | 3 | 33 |
| | 4 pole | A213 | 4 | 33 |
| | 5 pole | A361 | 5 | 57 |
| | 6 pole | A362 | 6 | 57 |
| | 7 pole | WAA363 | 7 | 57 |
| | 8 pole | WAA364 | 8 | 57 |
| with electrically | 1 pole | A710 | 1 | 81 |
| isolated contacts | 2 pole | A711 | 2 | 81 |
| | 3 pole | A712 | 3 | 81 |
| | 4 pole | A713 | 4 | 81 |
| Positions (1-0-2) | 1 pole | A218 | 1 | 35 |
| 90° Switching | 2 pole | A219 | 2 | 35 |
| | 3 pole | WAA299 | 3 | 48 |
| KG-, KH-, KF-Serie | 3 pole | K900 | | 88 |
| 1 Pol preclose 30° | 4 pole | WAA294 | 4 | 44 |
| KG-, KH-, KF-Serie, 4. pole preclose 30° | 4 pole | K950 | | 88 |
| Positions (1-0-2) | 1 pole | A214 | 1 | 34 |
| 30° with spring return | 2 pole | A215 | 2 | 34 |
| to center | 3 pole | A216 | 3 | 34 |

# Contents


| | | Code-no. | Stages C/CG/CH | Page |
|---|---|---|---|---|
| **Double-throw Switches** | | | | |
| with electrically isolated contacts | 1 pole | A714 | 1 | 82 |
| | 2 pole | A715 | 2 | 82 |
| Positions (1-0-2) with spring return from left to center from 1 to 0 | 1 pole | A320 | 1 | 53 |
| | 2 pole | A321 | 3 | 52 |
| | 3 pole | A322 | 2 | 53 |
| **Multi-step Switches without „OFF“ position** | | | | |
| 1 pole | 3 Step 60° | A230 | 2 | 38 |
| | 4 Step 60° | A231 | 2 | 38 |
| | 5 Step 60° | A232 | 3 | 38 |
| | 6 Step 60° | A233 | 3 | 38 |
| | 7 Step 45° | WAA234 | 4 | 38 |
| | 8 Step 45° | WAA236 | 4 | 38 |
| | 9 Step 30° | WAA236 | 5 | 38 |
| | 10 Step 30° | WAA237 | 5 | 38 |
| | 11 Step 30° | WAA239 | 6 | 38 |
| | 12 Step 30° | WAA239 | 6 | 38 |
| 2 pole | 3 Step 60° | A250 | 3 | 41 |
| | 4 Step 50° | A251 | 4 | 41 |
| | 5 Step 60° | A252 | 5 | 41 |
| | 6 Step 60° | WAA253 | 6 | 41 |
| | 7 Step 45° | WAA254 | 7 | 41 |
| | 8 Step 45° | WAA255 | 8 | 41 |
| 3 pole | 3 Step 60° | A270 | 5 | 43 |
| | 4 Step 60° | A271 | 6 | 43 |
| | 5 Step 60° | WAA272 | 8 | 43 |
| | 6 Step 60° | WAA273 | 9 | 43 |
| | 7 Step 45° | WAA274 | 11 | 43 |
| | 8 Step 45° | WAA275 | 12 | 43 |
| 4 pole | 3 Step 60° | A476 | 6 | 71 |
| | 4 Step 60° | A477 | 8 | 71 |
| | 5 Step 60° | WAA478 | 10 | 71 |

# Contents


| | | | Code-no. | Stages C/CG/CH | Page |
|---|---|---|---|---|---|
| **Multi-step Switches without „OFF“ position** | | | | | |
| 5 pole | 3 Step | 60° | WAA484 | 8 | 73 |
| | 4 Step | 60° | WAA485 | 10 | 73 |
| 6 pole | 3 Step | 60° | WAA489 | 9 | 75 |
| | 4 Step | 60° | WAA490 | 12 | 75 |
| and electrically isolated contacts | | | | | |
| 1 pole | 3 Step | 60° | A730 | 2 | 82 |
| | 4 Step | 60° | A731 | 2 | 85 |
| 2 pole | 3 Step | 60° | A750 | 3 | 84 |
| | 4 Step | 60° | A751 | 4 | 85 |
| **Multi-step Switches with „OFF“ position** | | | | | |
| 1 pole | 2 Step | 60° | A240 | 1 | 38 |
| | 3 Step | 45° | A242 | 2 | 39 |
| | 4 Step | 30° | A242 | 2 | 39 |
| | 5 Step | 30° | A243 | 3 | 39 |
| | 6 Step | 30° | A244 | 3 | 39 |
| | 7 Step | 30° | WAA245 | 4 | 39 |
| | 8 Step | 30° | WAA246 | 4 | 39 |
| | 9 Step | 30° | WAA247 | 5 | 39 |
| | 10 Step | 30° | WAA248 | 5 | 39 |
| | 11 Step | 30° | WAA249 | 6 | 39 |
| 2 pole | 2 Step | 50° | A260 | 2 | 42 |
| | 3 Step | 45° | A261 | 3 | 42 |
| | 4 Step | 30° | WAA262 | 4 | 42 |
| | 5 Step | 30° | WAA263 | 5 | 42 |
| | 6 Step | 30° | WAA264 | 6 | 42 |
| | 7 Step | 30° | WAA265 | 7 | 42 |
| 3 pole | 2 Step | 60° | A280 | 3 | 44 |
| | 3 Step | 45° | A281 | 5 | 44 |
| | 4 Step | 30° | WAA282 | 6 | 44 |
| | 5 Step | 30° | WAA283 | 8 | 44 |
| | 6 Step | 30° | WAA284 | 9 | 44 |

# Contents


| | | | Code-no. | Stages C/CG/CH | Page |
|---|---|---|---|---|---|
| **Multi-step Switches with „OFF“ position** | | | | | |
| 4 pole | 2 Step | 60° | WAA480 | 4 | 72 |
| | 3 Step | 45° | WAA481 | 6 | 72 |
| | 4 Step | 30° | WAA482 | 8 | 72 |
| 5 pole | 2 Step | 60° | WAA486 | 5 | 74 |
| | 3 Step | 45° | WAA487 | 8 | 74 |
| 6 pole | 2 Step | 60° | WAA491 | 6 | 75 |
| **General Application Switches** | | | | | |
| 2 Gang | 1 pole | 60° | A310 | 1 | 49 |
| Switching sequence: | 2 pole | 60° | A312 | 2 | 50 |
| 0, A, A+B | 3 pole | 60° | WAA314 | 3 | 51 |
| 3 Gang | 1 pole | 30° | A311 | 2 | 49 |
| Switching sequence: | 2 pole | 30° | WAA313 | 3 | 50 |
| 0, A, A+B, A+B+C | 3 pole | 30° | WAA315 | 5 | 52 |
| **General Application Series - Switching** | | | | | |
| 2 Gang | 1 pole | 30° | WAA330 | 1 | 55 |
| Switching sequence: | 2 pole | 30° | WAA331 | 2 | 55 |
| 0, A, B, A+B | 3 pole | 30° | WAA332 | 3 | 55 |
| **Coding Switches/Binary Code** | | | | | |
| 0 up to 7 | | 30° | A540 | 2 | 76 |
| 0 up to 7 complement | | 45° | WAA541 | 2 | 76 |
| 0 up to 7+complement | | 45° | WAA542 | 3 | 77 |
| 0 up to 11 | | 30° | A543 | 2 | 77 |
| 0 up to 11+complement | | 30° | WAA545 | 4 | 78 |
| **Coding Switchtes/BCD-Code** | | | | | |
| 0 up to 9 | | 30° | A550 | 2 | 78 |
| 0 up to 9 complement | | 30° | WAA551 | 2 | 79 |
| 0 up to 9+complement | | 30° | WAA552 | 4 | 79 |

# Contents


| | | Code-no. | Stages C/CG/CH | Page |
|---|---|---|---|---|
| **Voltmeter-Double-throw Switches** | | | | |
| without „OFF“ | | | | |
| 3 phase 3 wire | 45° | A023 | 2 | 19 |
| 3 phase 3 wire and phase to neutral | 45° | A025 | 3 | 19 |
| with „OFF“ | | | | |
| 3 phase 3 wire | 45° | A004 | 2 | 14 |
| 3 phase to neutral | 45° | WAA005 | 2 | 15 |
| 3 phase 3 wire and phase to neutral | 45° | A007 | 3 | 16 |
| 2 separate 3 phase with „OFF“ | 45° | WAA008 | 4 | 17 |
| **Ammeter-Double-throw Switches** | | | | |
| with „OFF“ | | | | |
| 1 pole 3 Current transformers | 90° | A048 | 3 | 24 |
| 2 pole 2 Current transformers | 90° | WAA037 | 3 | 21 |
| 2 pole 3 Current transformers | 90° | A038 | 5 | 22 |
| without „OFF“ | | | | |
| 1 pole 3 Current transformers | 90° | WAA017 | 3 | 18 |
| 1 pole 4 Current transformers | 90° | WAA036 | 4 | 20 |
| 2 pole 4 Current transformers | 90° | WAA039 | 6 | 23 |

# Contents


| | | | Code-no. | Stages C/CG/CH | Page |
|---|---|---|---|---|---|
| **Control Switches** | | | | | |
| Stop switch | 1 pole | 30° | WAA174 | 1 | 25 |
| Start switch | 1 pole | 30° | A175 | 1 | 25 |
| Stop start switch | 1 pole | 30° | A176 | 1 | 26 |
| | 2 pole | 30° | WAA183 | 2 | 30 |
| Stop start switch with spring return from start to run | | 90°+30° | A178 | 1 | 28 |
| Double-Stop start switch with spring return from start to run | | 60°+30° | WAA177 | 2 | 27 |
| for contactor interlock with spring return from start to run | | 60°+30° | WAA182 | 2 | 30 |
| and electrically isolated contacts | | | | | |
| Stop start switch | 1 pole | 30° | A789 | 1 | 86 |
| Stop start switch with spring return form start to run | | 90°+30° | A791 | 1 | 86 |
| for 2 contactors, Contactor control with spring return to „OFF“ | | 30° | WAA179 | 3 | 29 |
| Main Switches 3, 4, 6, 8 pole, with and without auxiliary contacts | | | | | 87 |

# Contents


| | | Code-no. | Stages C/CG/CH | Page |
|---|---|---|---|---|
| **Motor Switches** | | | | |
| Motor Reversing Switches | | | | |
| Position (1-0-2) | 2 pole 60° | A400 | 2 | 59 |
| | 3 pole 60° | A401 | 3 | 59 |
| with spring return to „OFF“ | 3 pole 30° | A228 | 3 | 37 |
| Star-delta Switches | | | | |
| Normal version | 60° | A410 | 4 | 60 |
| Reversing | 45° | WAA413 | 5 | 61 |
| with auxiliary contact, closed in „OFF“-Position | 60° | WAA416 | 5 | 62 |
| For use with contactors | 90° | A419 | 4 | 62 |
| Motor Control Switches | | | | |
| Position (0-1-2) | 60° | A440 | 4 | 64 |
| without „OFF“ | 60° | A466 | 4 | 69 |
| Position (1-0-2) | 60° | A441 | 4 | 64 |
| Reversing | 45° | A442 | 6 | 65 |
| for reversing for for use with contactors and | 60° | WAA444 | 5 | 66 |
| with slip clutch for „OFF“ load use | 45° | WAA468 | 10* | 70 |
| Motor Control Switches | | | | |
| 2 speed, 2 winding 0 - A - B, Y or Δ | 60° | WAA451 | 3 | 67 |
| 3 speed, 2 winding 0 - AΔ - BY - AYY | 45° | WAA457 | 6 | 68 |
| Start and Run Switches | | | | |
| Split-phase start | 90°+30° | A425 | 2 | 63 |
| Reversing Split-phase start | 60°+30° | WAA426 | 3 | 63 |
| Split-phase reversing auto cutout of start field winding | 60° | A622 | 3 | 80 |


* with slip clutch

# Caption

| | |
|---|---|
| Contactor or Relay | |
| Thermal Relay | |
| Motor | M |
| Coil / Inductance | |
| Ammeter | A |
| Voltmeter | V |
| Earth / Ground | |
| NO-contact | |
| NC-contact | |
| Motor - star circuit | |
| Motor - delta circuit | |
| Motor - double star circuit | |

# Connection Details

The information is presented with either a switch chart only or a switch chart and connection diagrams when appropriate.

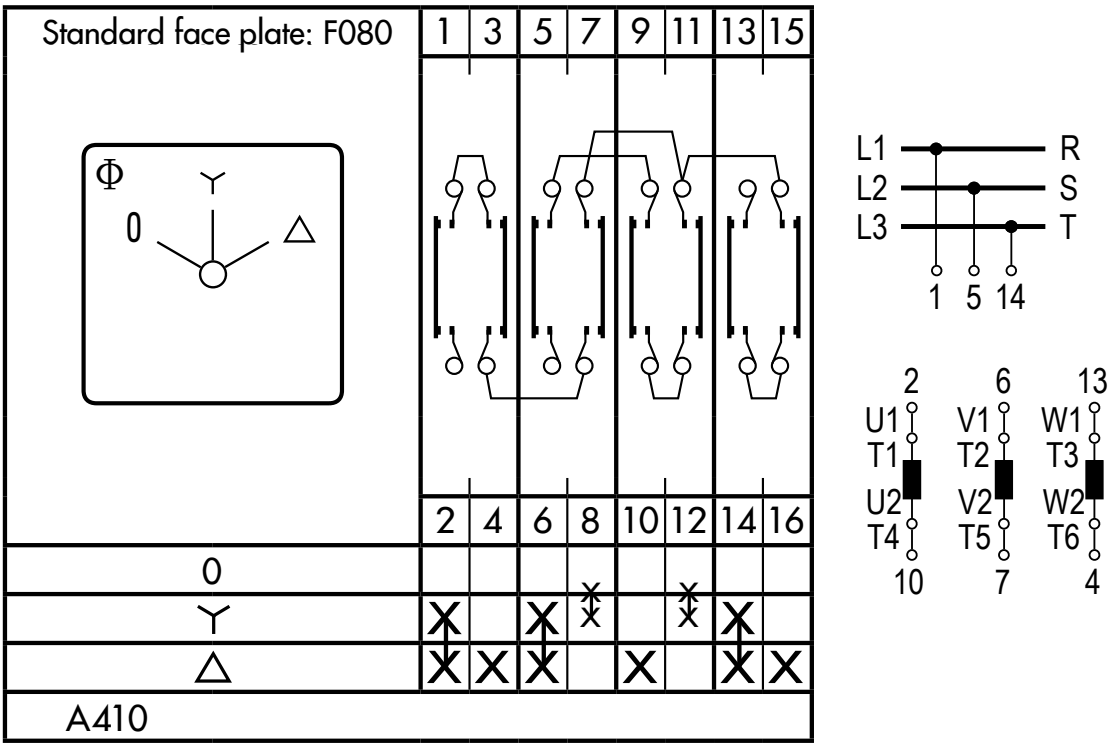


## A410 Star-Delta Switch

The large image shows the switch chart. A cross in a column indicates that the contact above it is closed, when the switch is in the position as indicated to the left of the cross. For example, contact 3/4 closes in the delta position. A vertical line between 2 or more crosses indicate that the contact remains closed while the switch moves from one position to the next. The images on the right show the wiring connections for both the supply and load. For example, L1 connects to switch terminal 1 while U1 or T1 connects to terminal 2.

# Voltmeter switches

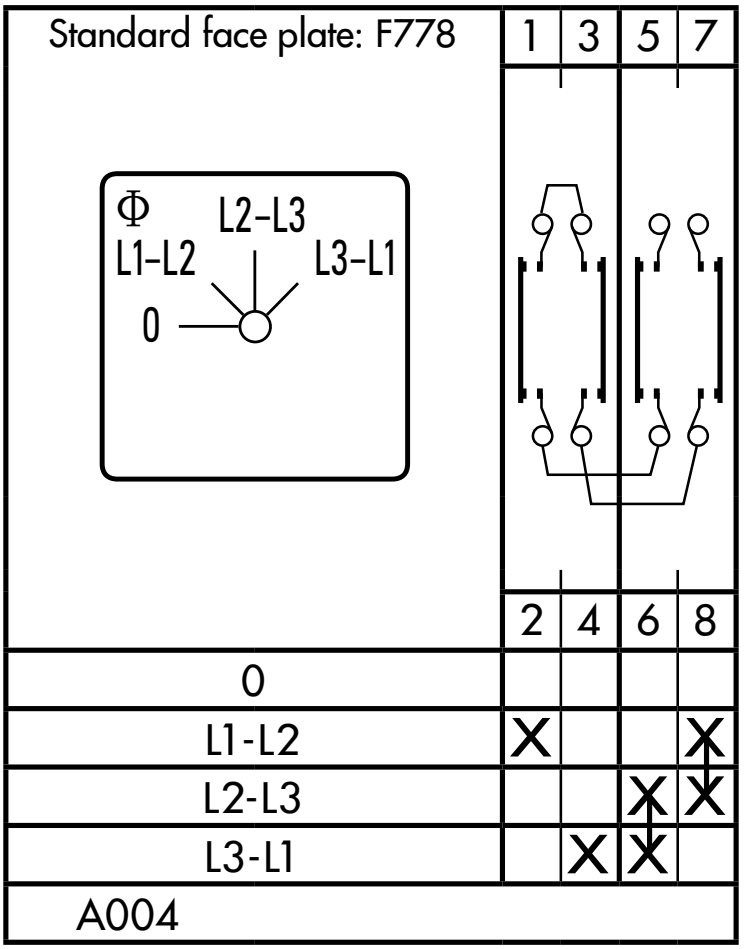


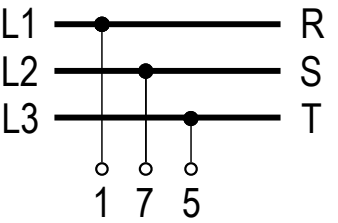


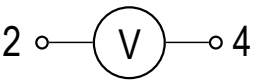


A004 Voltmeter Switch
3 phase 3 wire

# Voltmeter switches

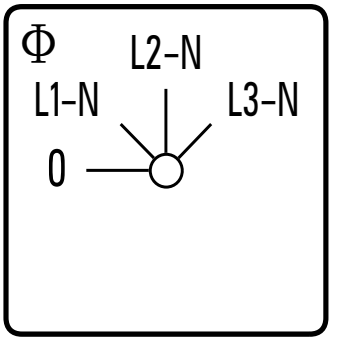


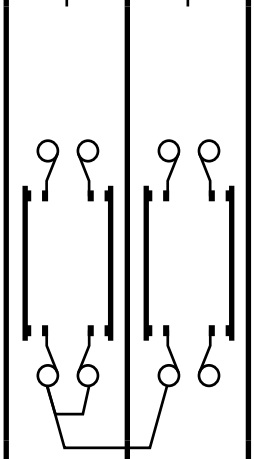

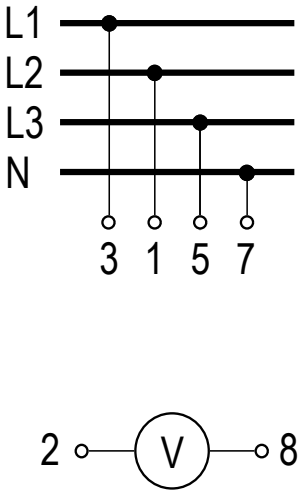


| Standard face plate: F781 | 1 | 3 | 5 | 7 |
|---|---|---|---|---|
| | 2 | 4 | 6 | 8 |
| 0 | | | | |
| L1-N | | X | | X |
| L2-N | X | | | |
| L3-N | | | X | X |
| WAA005 | | | | |

WAA005 Voltmeter Switch
(formerly A005) 3 phase to neutral

# Voltmeter switches

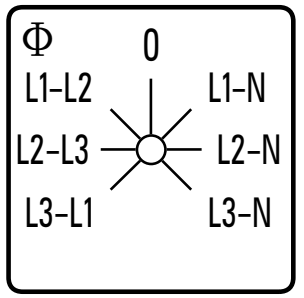


| Standard face plate: F785 | 1 | 3 | 5 | 7 | 9 | 11 |
|---|---|---|---|---|---|---|
| | 2 | 4 | 6 | 8 | 10 | 12 |
| L3-L1 | | X | | | X | |
| L2-L3 | | X | X | | | |
| L1-L2 | | | | X | X | |
| 0 | | | | | | |
| L1-N | | | | | X | X |
| L2-N | | | X | | | |
| L3-N | X | | | | | X |
| A007 | | | | | | |

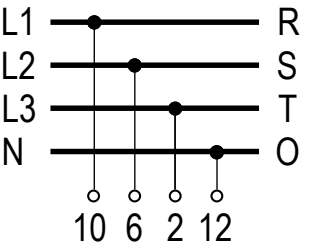


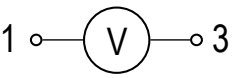


A007 Voltmeter Switch
3 phase to neutral

# Voltmeter switches

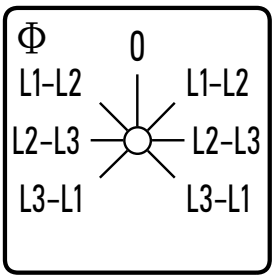


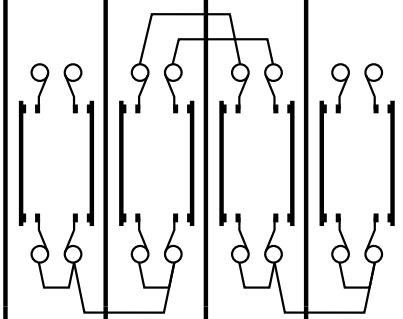

| Standard face plate: F788 | 1 | 3 | 5 | 7 | 9 | 11 | 13 | 15 |
|---|---|---|---|---|---|---|---|---|
| | 2 | 4 | 6 | 8 | 10 | 12 | 14 | 16 |
| L3-L1 | | X | | | | X | | |
| L2-L3 | | | | X | | | | X |
| L1-L2 | | X | | | | | | X |
| 0 | | | | | | | | |
| L1-L2 | X | | | | | | X | |
| L2-L3 | | | X | | | | X | |
| L3-L1 | X | | | | X | | | |
| WAA008 | | | | | | | | |

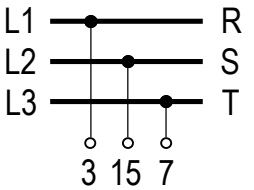


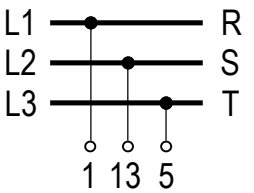


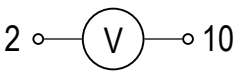


WAA008 Voltmeter Switch
(formerly A008) 2 separate 3 phase

# Ammeter switches

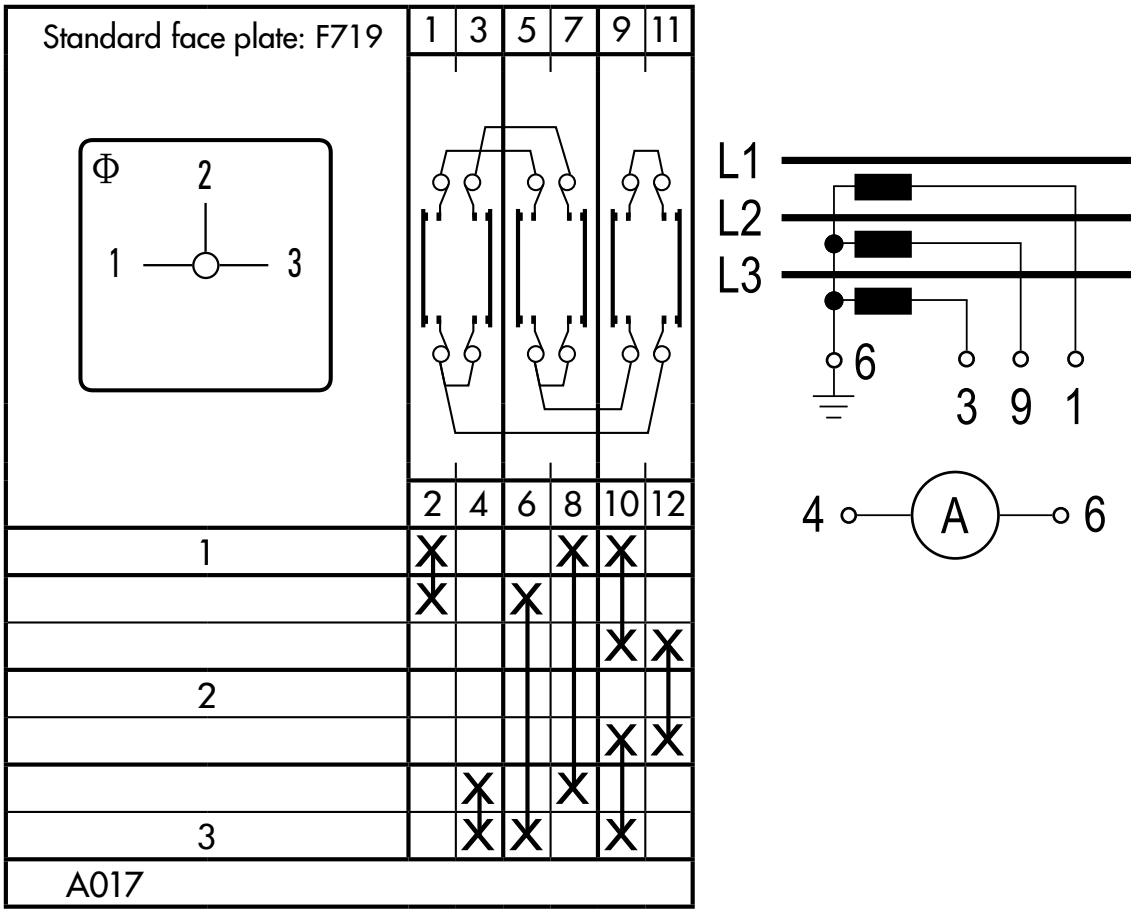


WAA017 Ammeter Switch
1 pole, 3 Current transformers

# Voltmeter switches

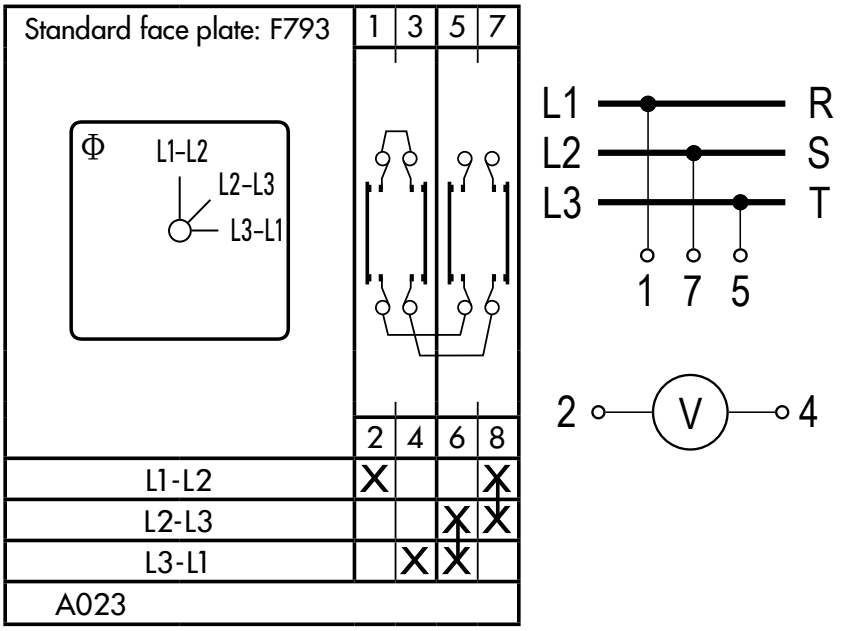


A023 Voltmeter Switch, 3 phase 3 wire

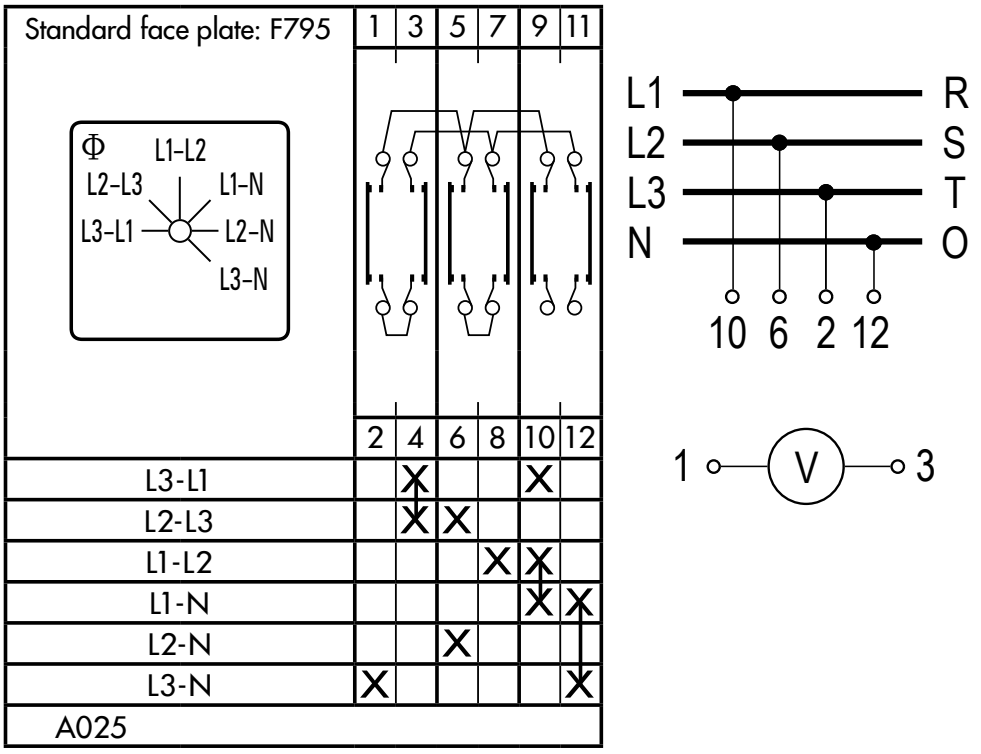


A025 Voltmeter Switch, 3 phase 3 wire,
3 phase to neutral

# Ammeter switches

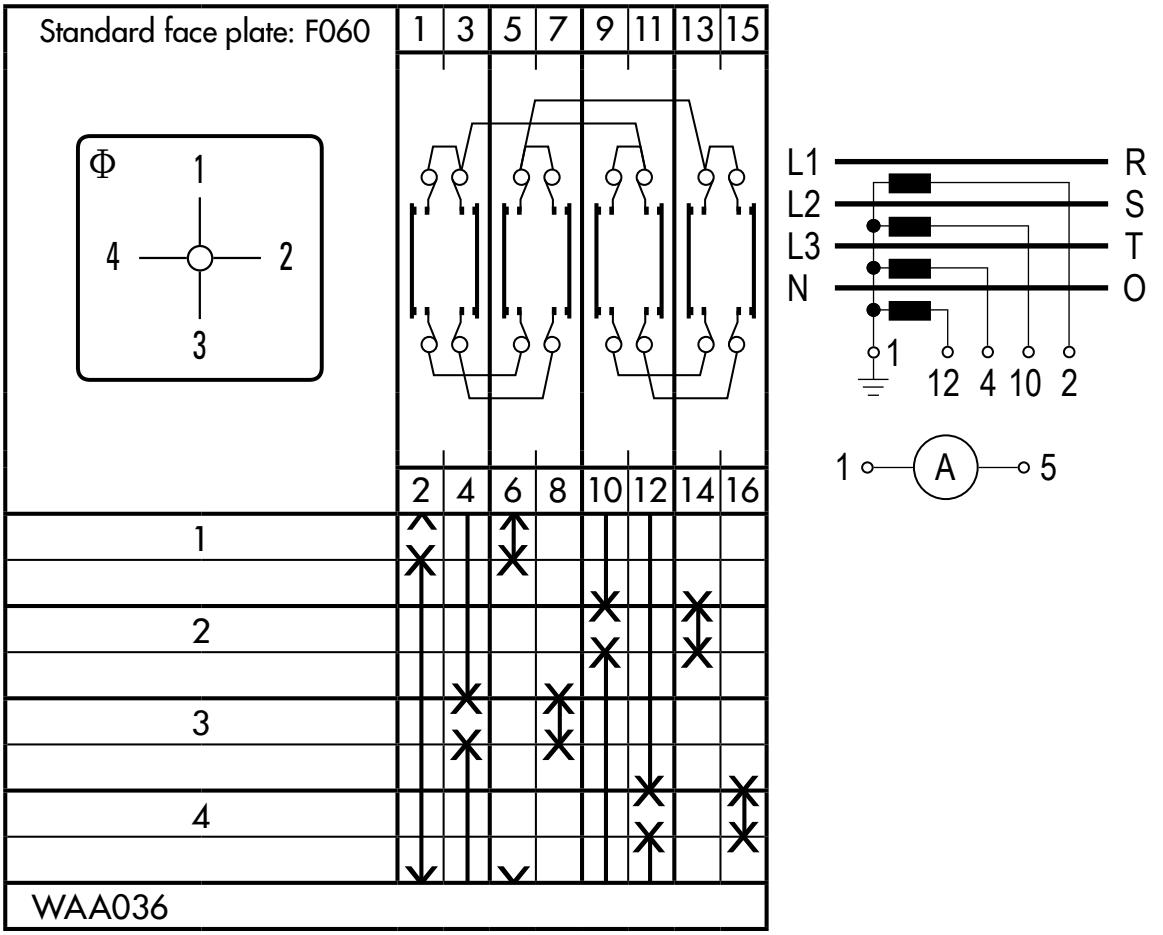


WAA036 Ammeter Switch
(formerly A036) 1 pole, 4 Current transformers

# Ammeter switches

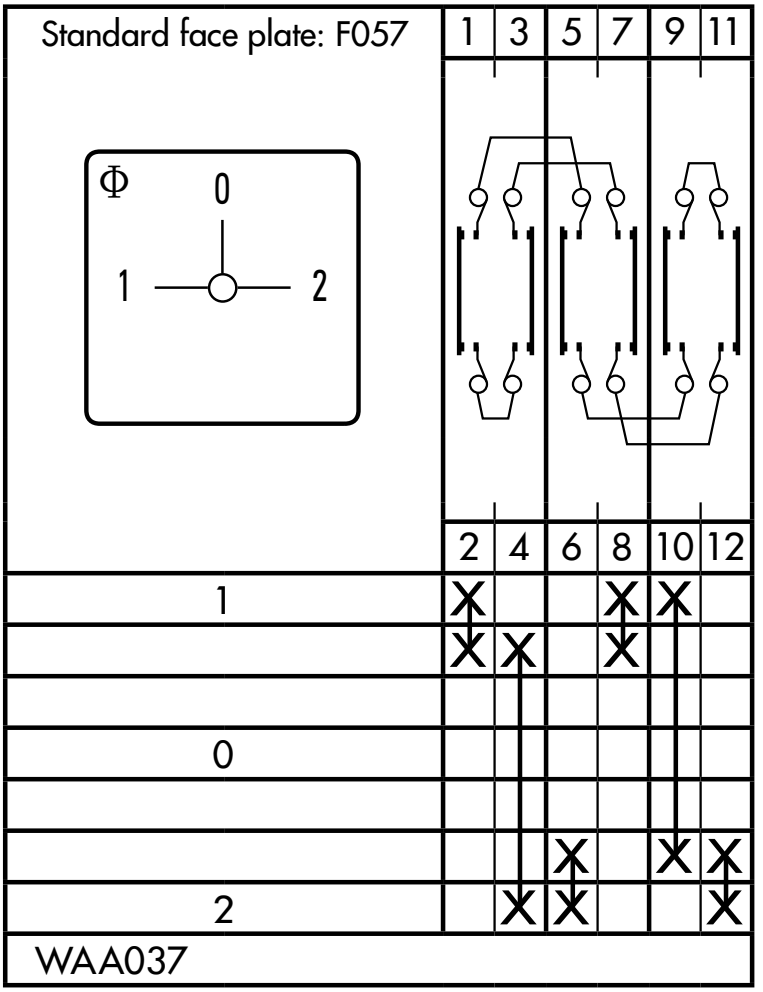


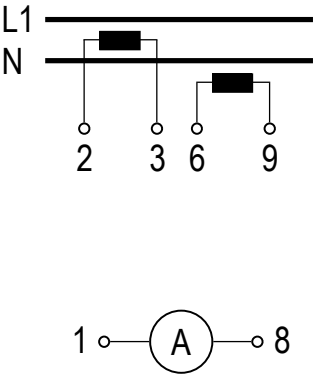


WAA037 Ammeter Switch
(formerly A037) 2 pole, 2 Current transformers

# Ammeter switches

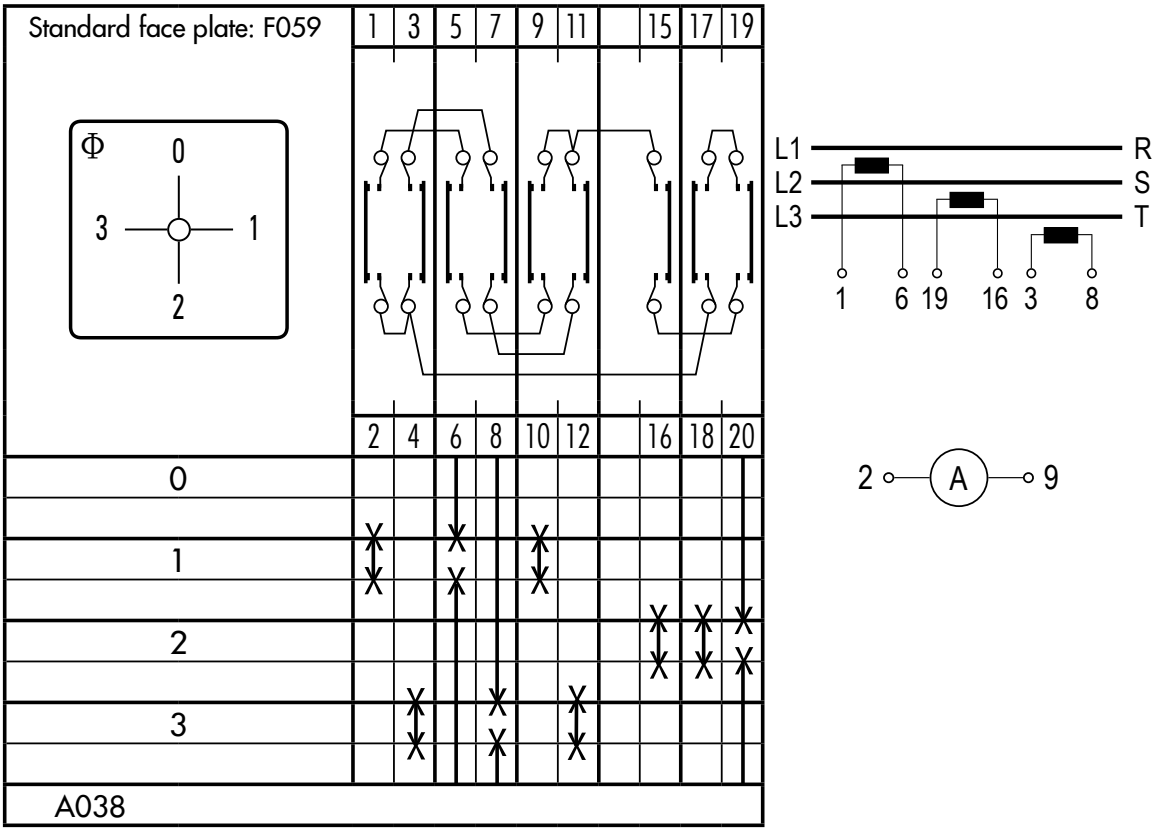


A038 Ammeter Switch
2 pole, 3 Current transformers

# Ammeter switches

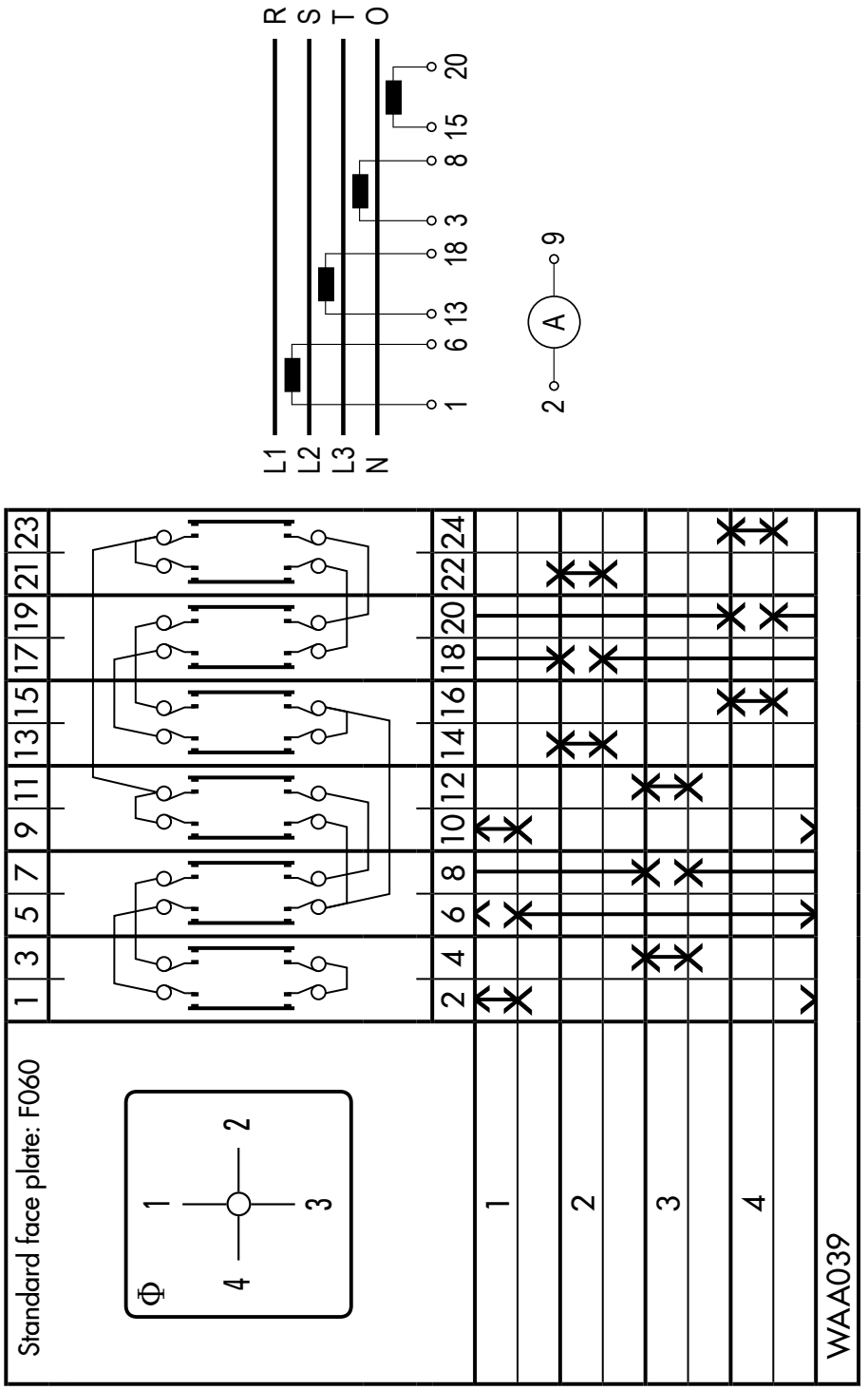


WAA039 Ammeter Switch
(formerly A039) 2 pole, 4 Current transformers

# Ammeter switches

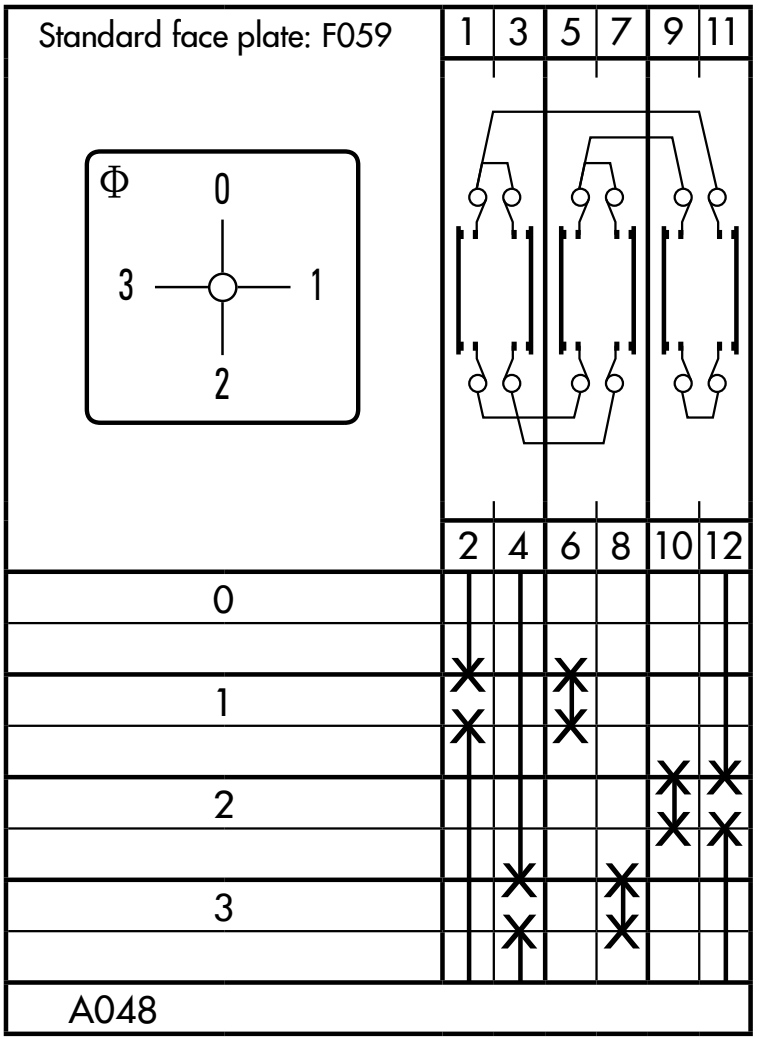


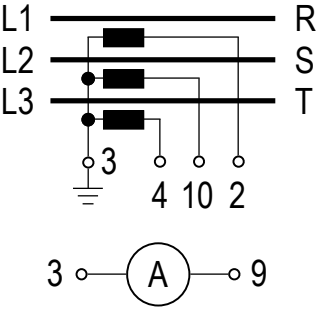


A048 Ammeter Switch
1 pole, 3 Current transformers

# Control Switches

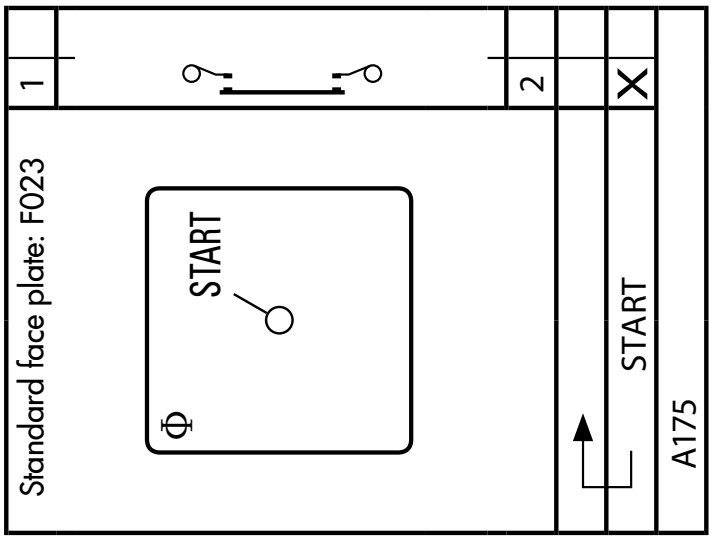


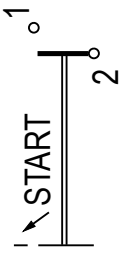


A175 Start switch
1 pole

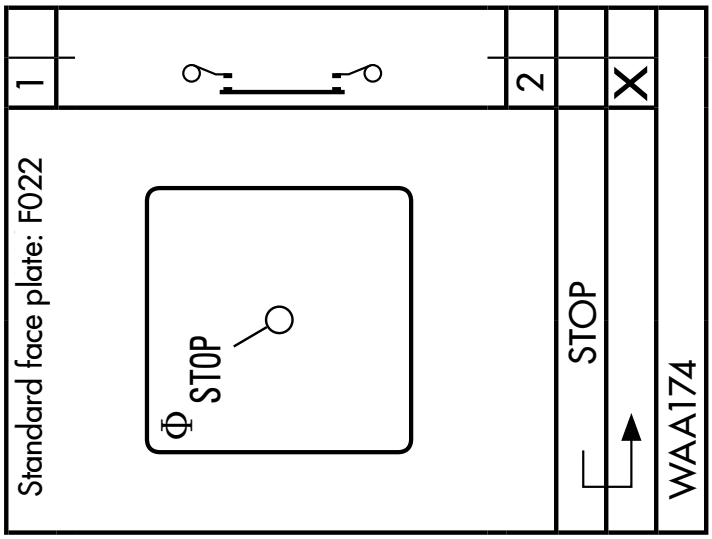


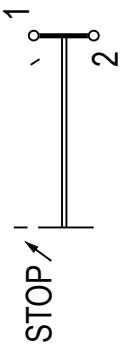


WAA174 Stop switch
(formerly A174) 1 pole

# Control Switches

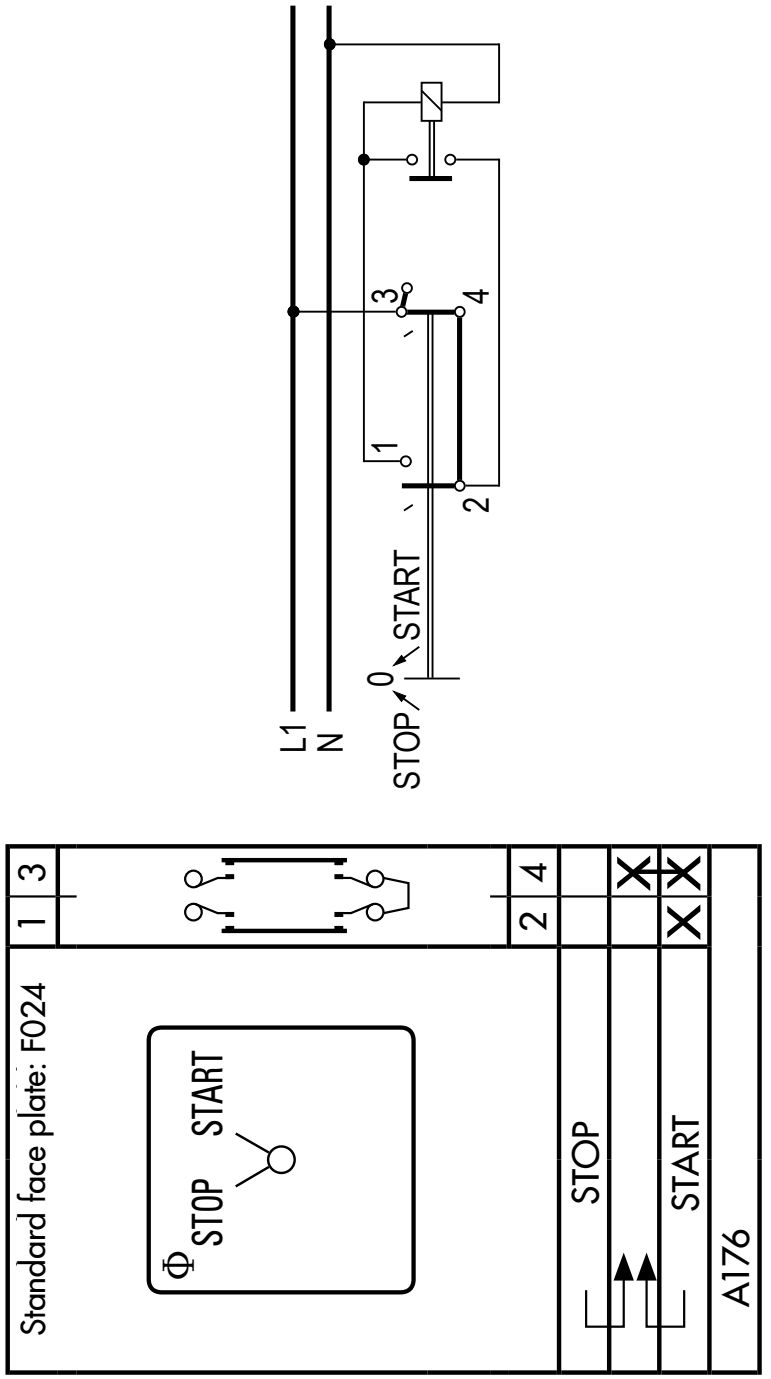


A176 Stop start switch
2 pole see page 31
Electrically isolated contacts see page 86

# Control Switches

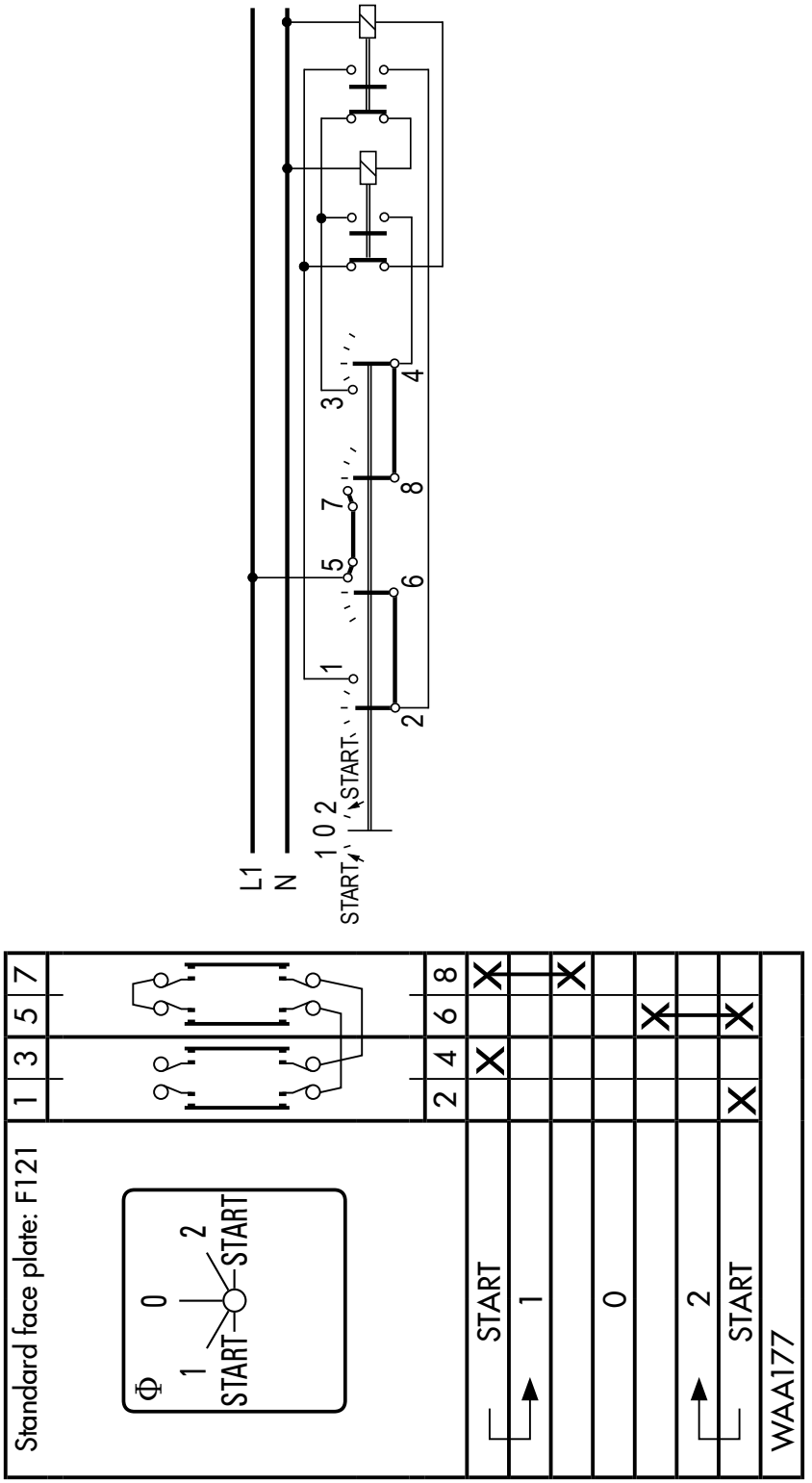


WAA177 Stop Start Switch for two units
(formerly A177) 2 pole, with spring return from start to run

# Control Switches

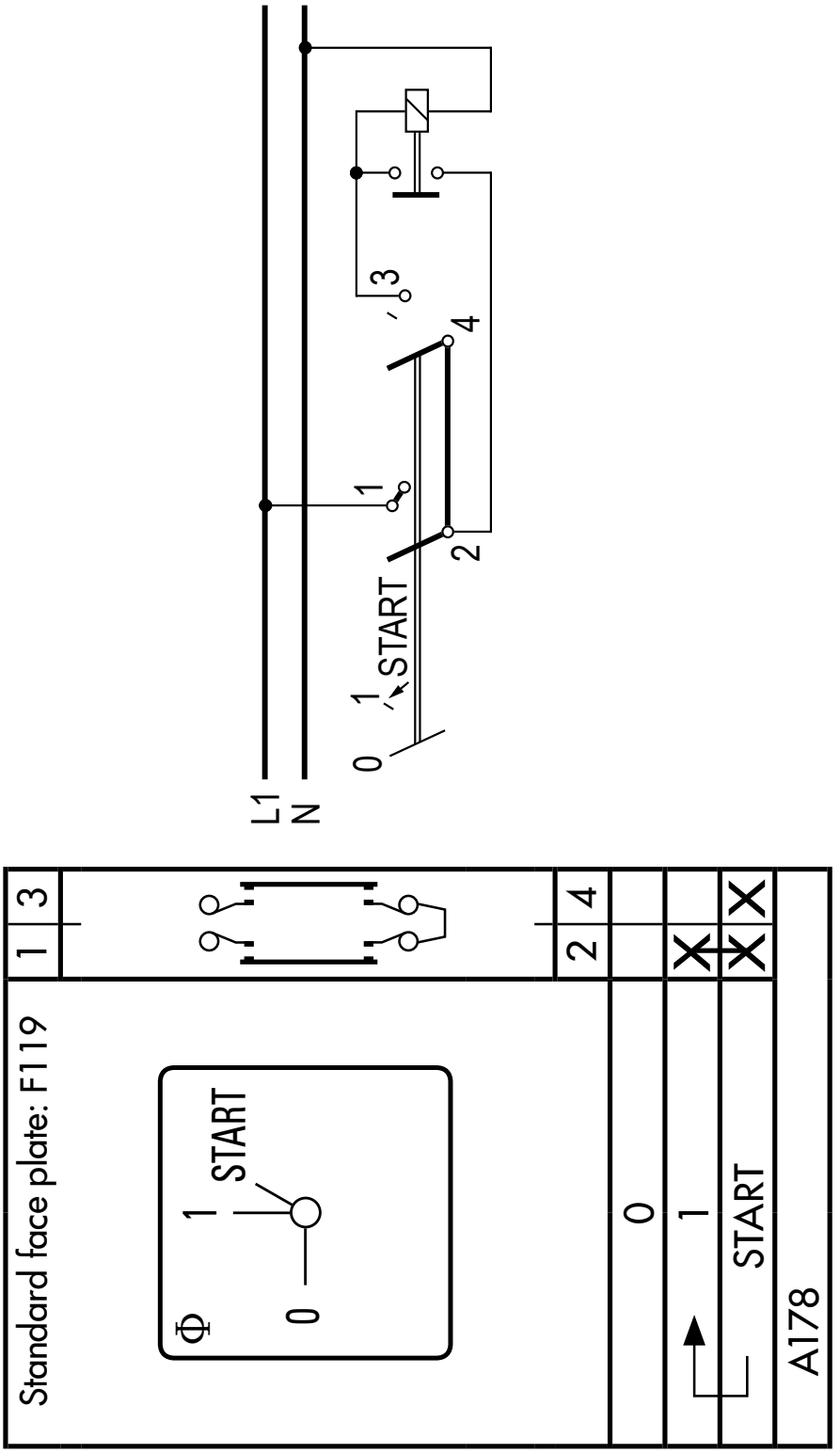


A178 Stop start switch
1 pole, with spring return from start to run
Electrically isolated contacts see page 86

# Control Switches

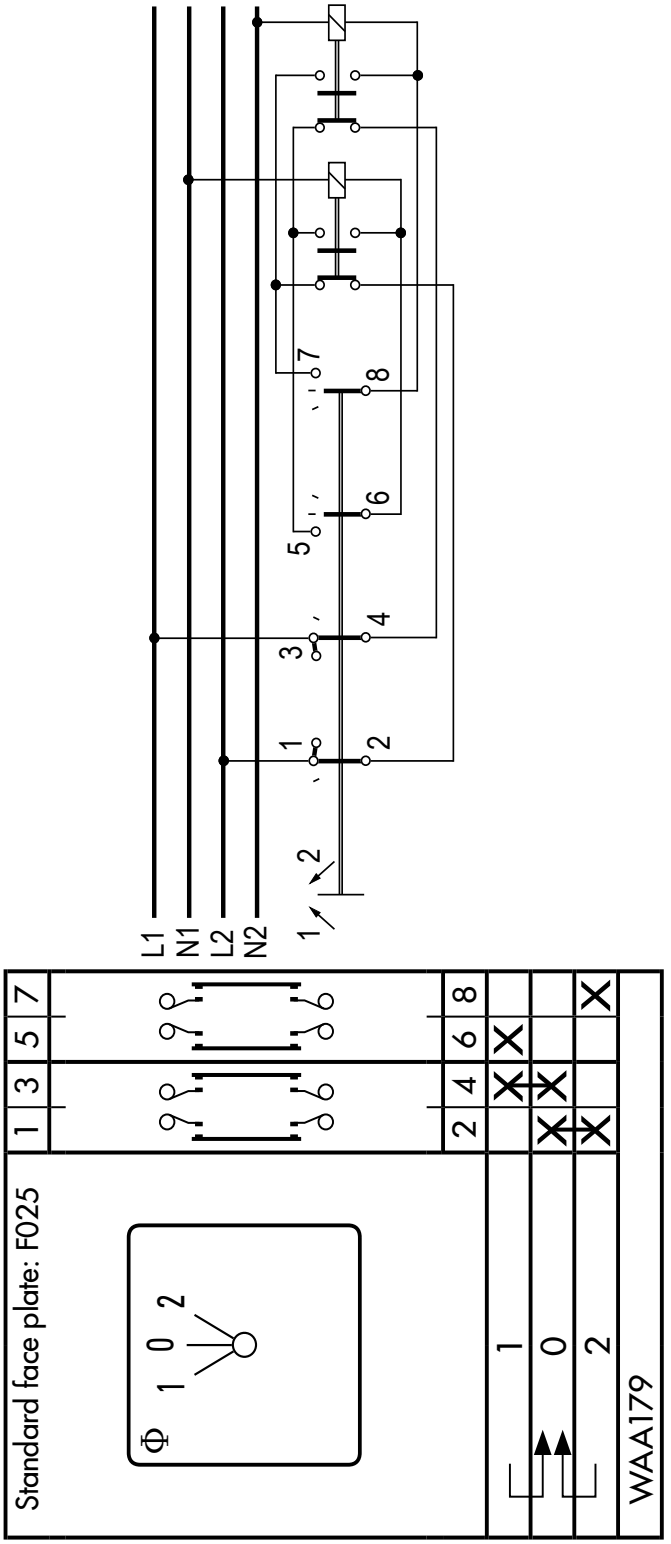


WAA179 Contactor control with spring return to „OFF"
(formerly A179)

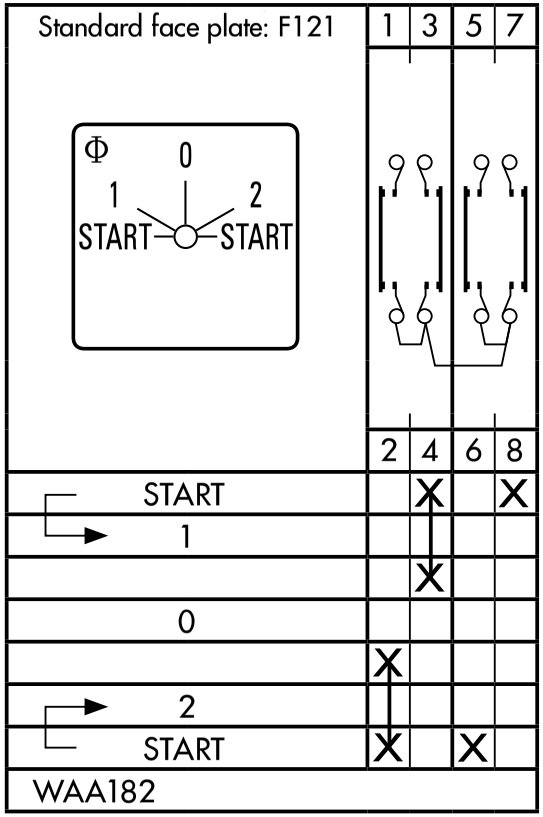


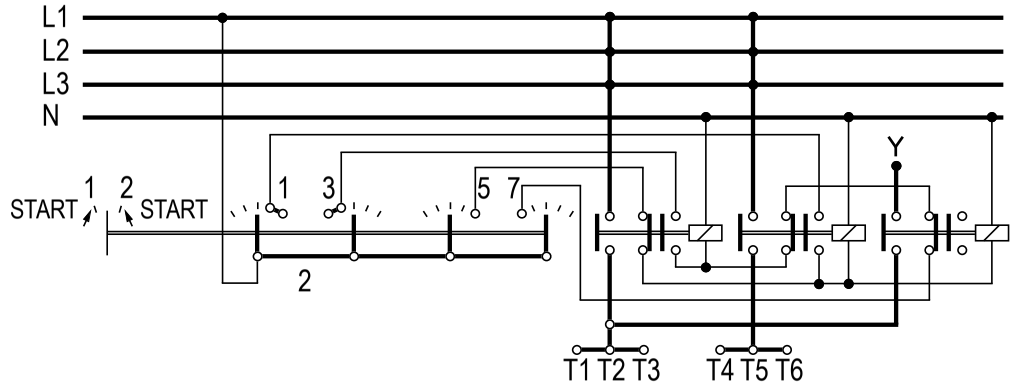


# WAA182 Stop Start Switch
(formerly A182) with spring return to run with contactor interlock

# Control Switches

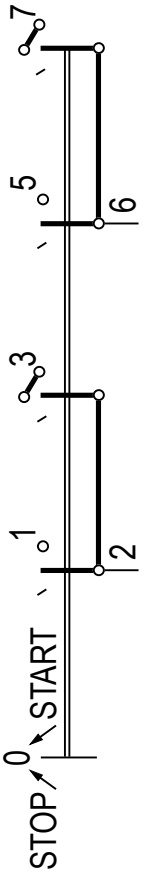


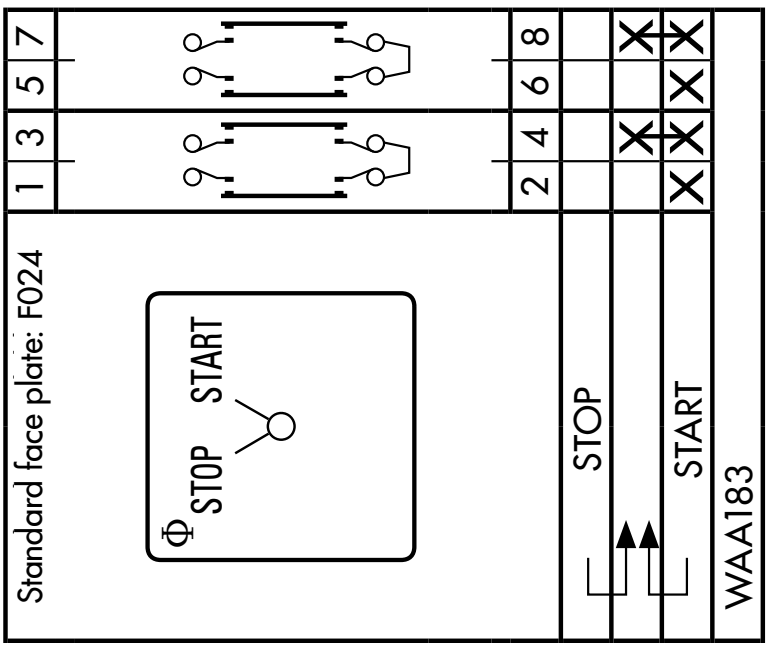


WAA183 Stop start switch
(formerly A183) 2 pole

# ON/OFF Switches

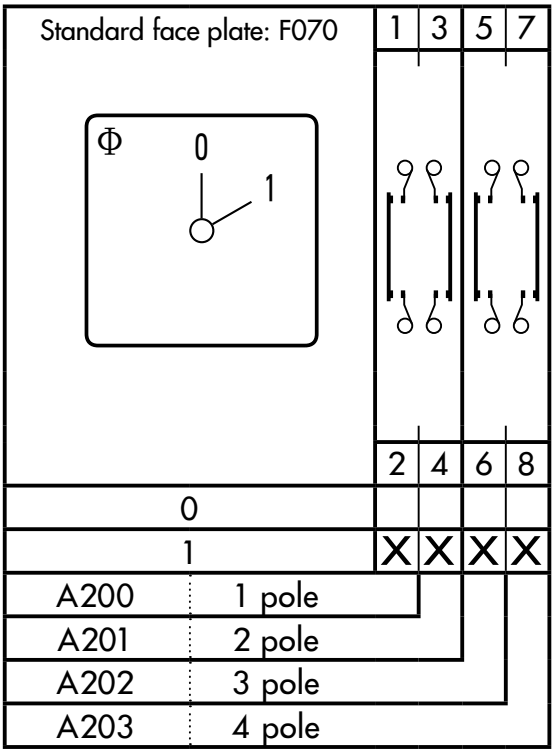


## A200 up to A203 ON/OFF Switches, 60° Switching

ON/OFF Switches 5- up to 12 pole
see page 56

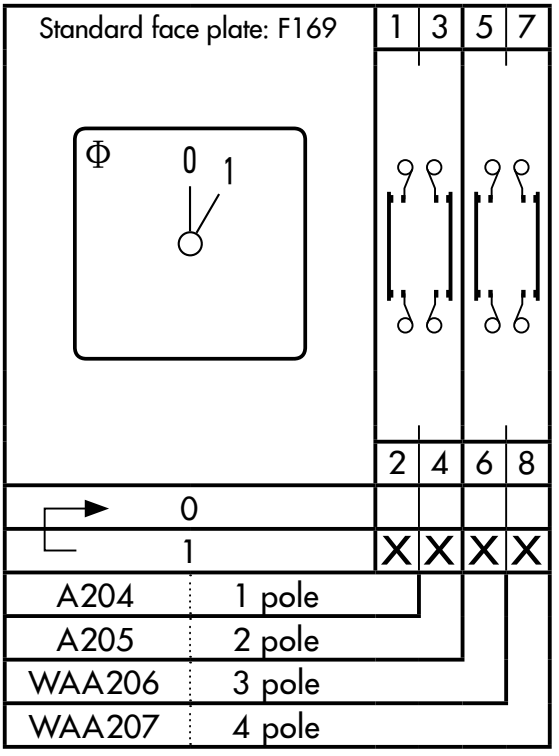


## A204 up to WAA207
(formerly A207)

## ON/OFF Switches with spring return, 30° Switching

# Double-throw Switches

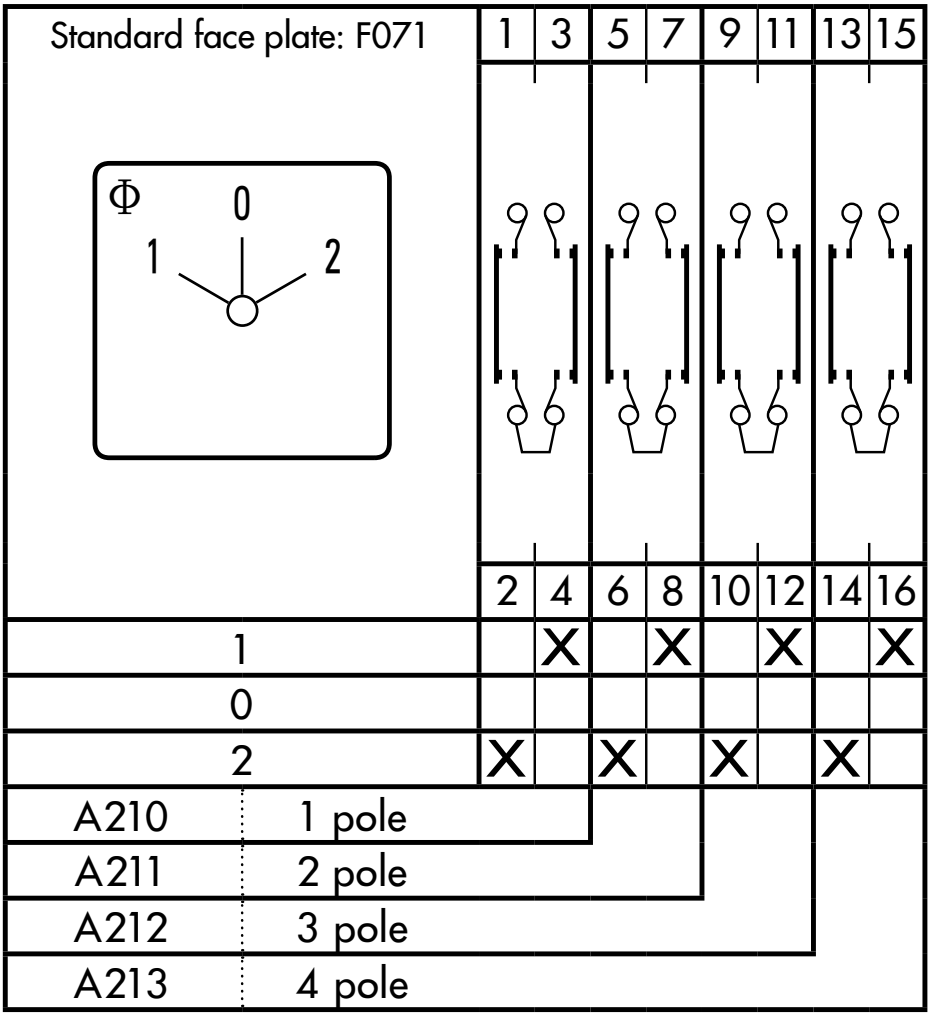


## A210 up to A213 Double-throw Switches, with „OFF“, 60° Switching

Electrically isolated contacts see page 81
Double-throw Switches with „OFF“, 5-8 pole see page 57

# Double-throw Switches

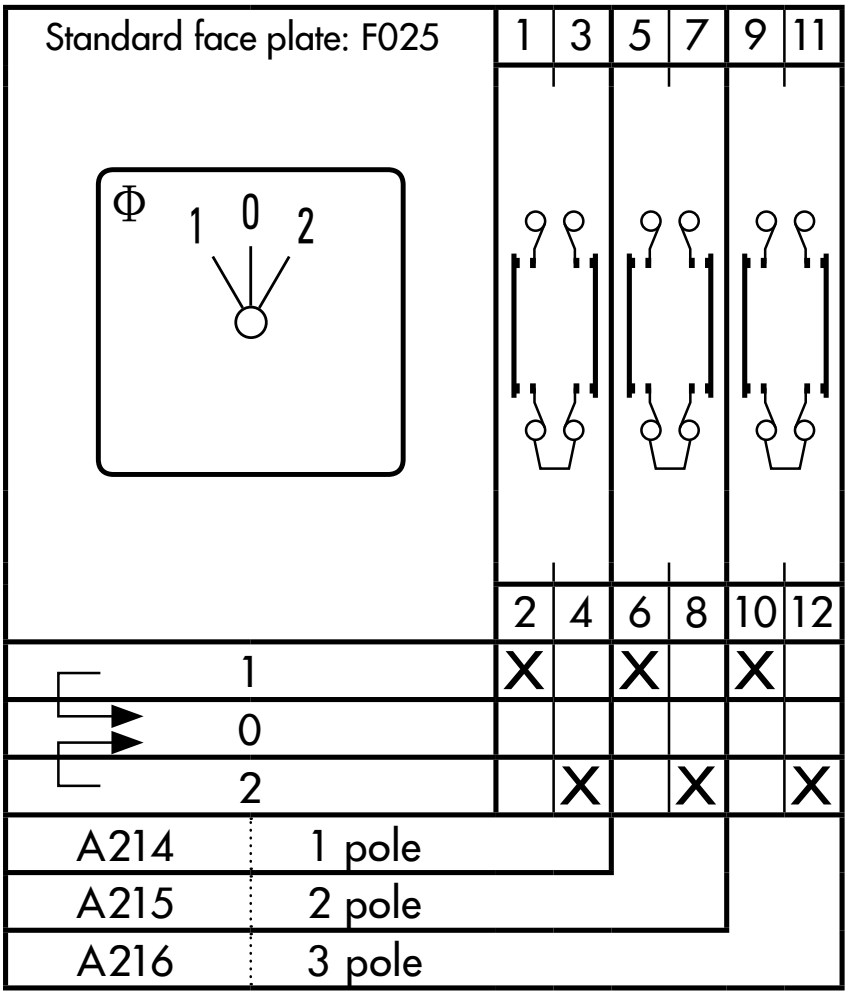


## A214 up to A216 Double-throw Switches with „OFF“ and with spring return to „OFF“, 30° Switching

Electrically isolated contacts see page 82

# Double-throw Switches

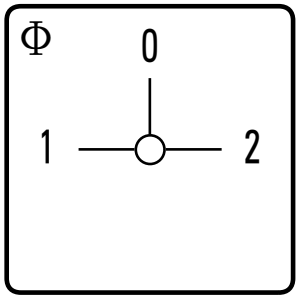


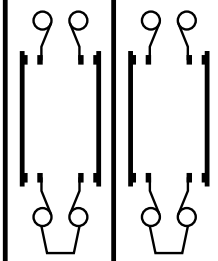

| Standard face plate: F057 | 1 | 3 | 5 | 7 |
|---|---|---|---|---|
| | 2 | 4 | 6 | 8 |
| 1 | X | | X | |
| | X | | X | |
| | | | | |
| 0 | | | | |
| | | | | |
| | | X | | X |
| 2 | | X | | X |

| | |
|---|---|
| A218 | 1 pole |
| A219 | 2 pole |

## A218, A219
## Double-throw Switches with „OFF“, 90° Switching

For 3 & 4 pole options see pages 48 & 46 respectively

# Double-throw Switches

Standard face plate: F072

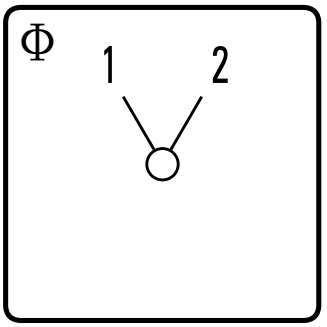


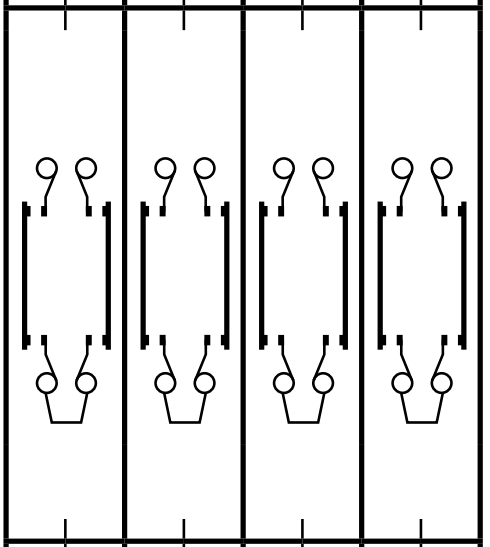

| | 1 | 3 | 5 | 7 | 9 | 11 | 13 | 15 |
|---|---|---|---|---|---|---|---|---|
| | 2 | 4 | 6 | 8 | 10 | 12 | 14 | 16 |
| 1 | X | | X | | X | | X | |
| | | | | | | | | |
| 2 | | X | | X | | X | | X |

| | |
|---|---|
| A220 | 1 pole |
| A221 | 2 pole |
| A222 | 3 pole |
| A223 | 4 pole |

## A220 up to A223
## Double-throw Switches without „OFF“, 60° Switching

Electrically isolated contacts see page 83

Double-throw Switches without „OFF“ 5-12 pole see page 58

# Motor Switches

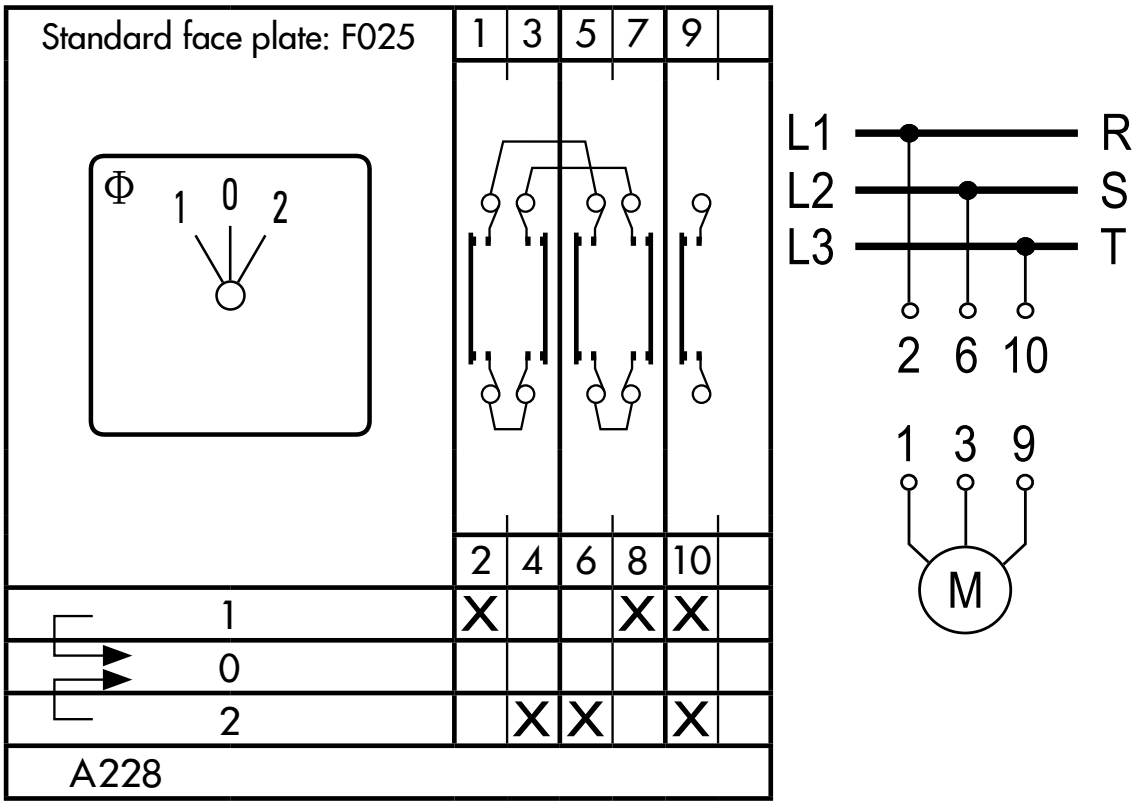


A228 Motor Reversing Switches
3 pole, with spring return to 0

# Multi-step Switches 1 pole without „OFF"

3 Step
A230 *

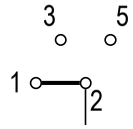


4 Step
A231 **

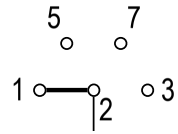


5 Step
A232

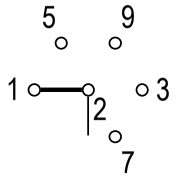


6 Step
A233

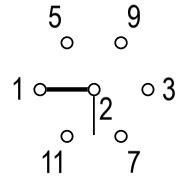


7 Step
WAA234 (formerly A234)

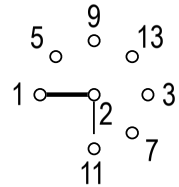


8 Step
WAA235 (formerly A235)

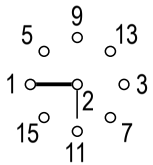


9 Step
WAA236 (formerly A236)

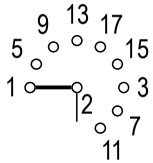


10 Step
WAA237 (formerly A237)

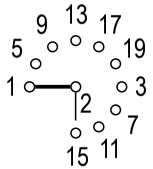


11 Step
WAA238 (formerly A238)

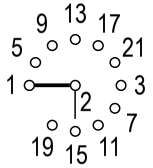


12 Step
WAA239 (formerly A239)

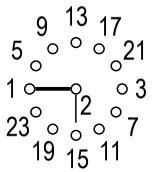


Numbers shown at the connection points on the above diagrams, correspond to the terminal numbers on the switch. The position of connection points correspond to the positions indicated on the face plate.

and electrically isolated contacts see *Page 84 resp. **Page 85

# Multi-step Switches 1 pole with „OFF“

| | | |
|---|---|---|
| 2 Step | A240 | 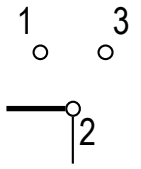 |
| 3 Step | A241 | 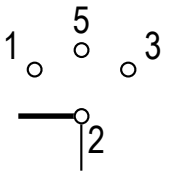 |
| 4 Step | A242 | 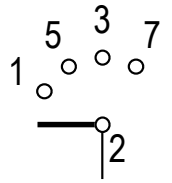 |
| 5 Step | A243 | 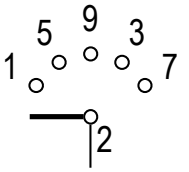 |
| 6 Step | A244 | 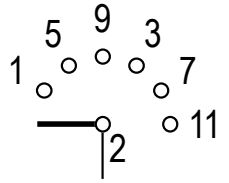 |
| 7 Step | WAA245<br>(formerly A245) | 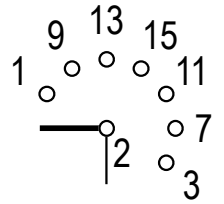 |

Numbers shown at the connection points on the above diagrams, correspond to the terminal numbers on the switch. The position of connection points correspond to the positions indicated on the face plate.

# Multi-step Switches 1 pole with „OFF“

8 Step

WAA246
(formerly A246)

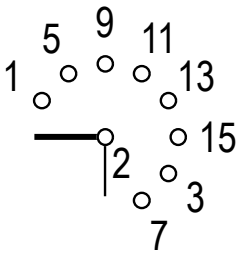


9 Step

WAA247
(formerly A247)

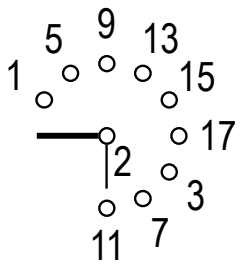


10 Step

WAA248
(formerly A248)

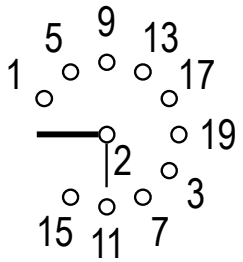


11 Step

WAA249
(formerly A249)

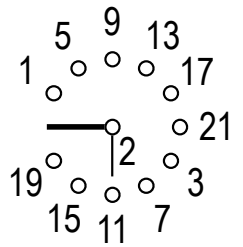


Numbers shown at the connection points on the above diagrams, correspond to the terminal numbers on the switch. The position of connection points correspond to the positions indicated on the face plate.

# Multi-step Switches 2 pole without „OFF“

3 Step — A250*

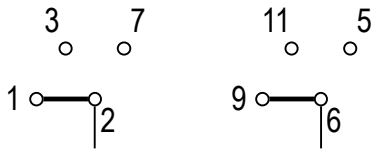


4 Step — A251**

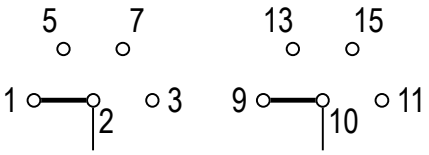


5 Step — A252

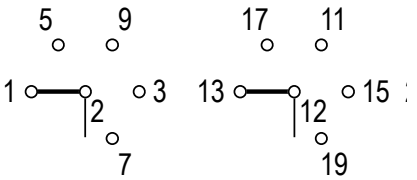


6 Step — WAA253 (formerly A253)

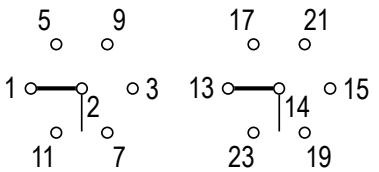


7 Step — WAA254 (formerly A254)

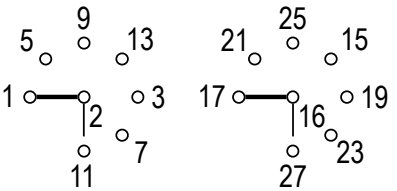


8 Step — WAA255 (formerly A255)

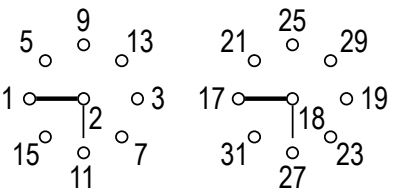


Electrically isolated contacts see *Page 84 resp. **Page 85

Numbers shown at the connection points on the above diagrams, correspond to the terminal numbers on the switch. The position of connection points correspond to the positions indicated on the face plate.

# Multi-step Switches 2 pole with „OFF“

2 Step — A260

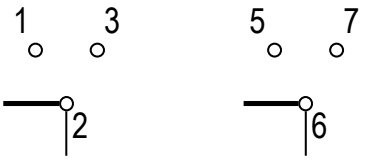


3 Step — A261

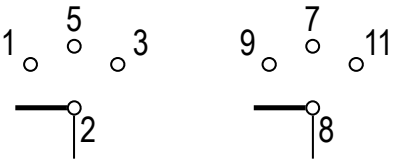


4 Step — WAA262 (formerly A262)

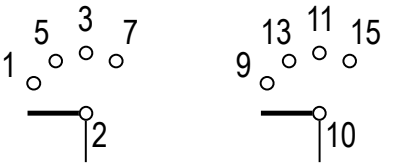


5 Step — WAA263 (formerly A263)

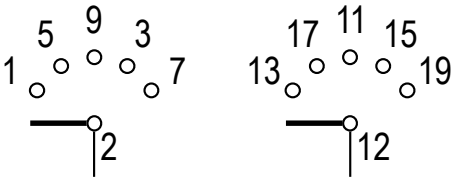


6 Step — WAA264 (formerly A264)

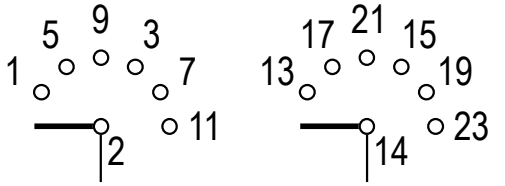


7 Step — WAA265 (formerly A265)

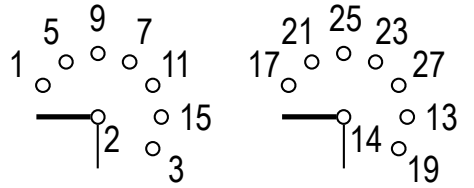


Numbers shown at the connection points on the above diagrams, correspond to the terminal numbers on the switch. The position of connection points correspond to the positions indicated on the face plate.

# Multi-step Switches 3 pole without „OFF“

3 Step
A270

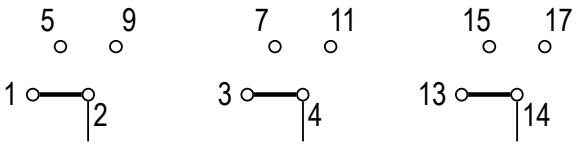


4 Step
A271

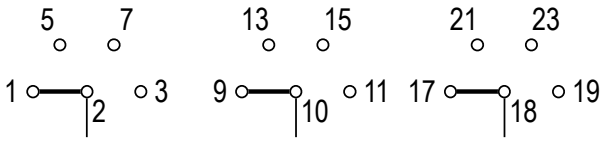


5 Step
WAA272
(formerly A272)

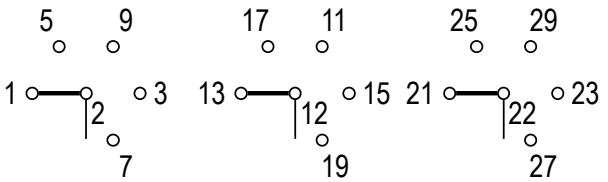


6 Step
WAA273
(formerly A273)

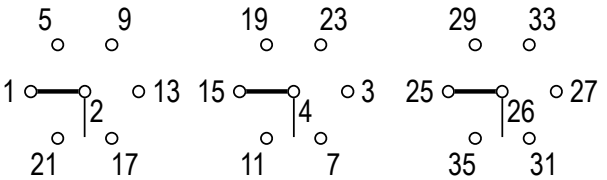


7 Step
WAA274
(formerly A274)

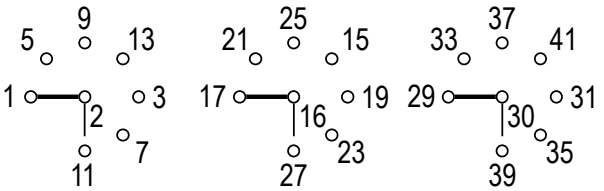


8 Step
WAA275
(formerly A275)

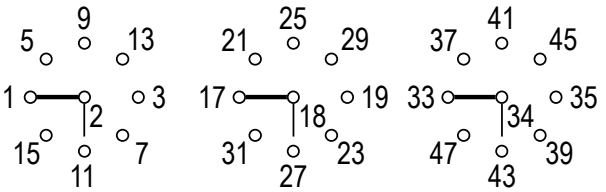


Numbers shown at the connection points on the above diagrams, correspond to the terminal numbers on the switch. The position of connection points correspond to the positions indicated on the face plate.

# Multi-step Switches 3 pole with „OFF“

2 Step
A280

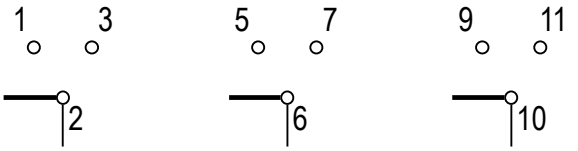


3 Step
A281

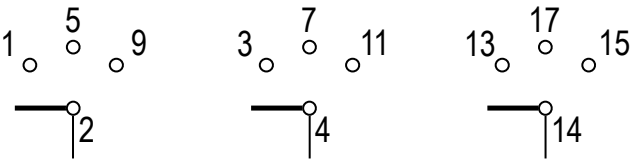


4 Step
WAA282
(formerly A282)

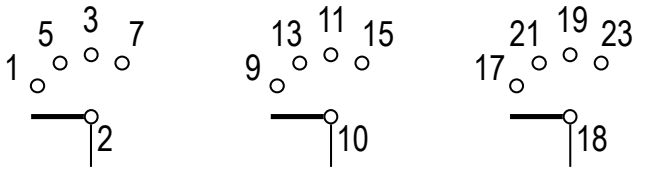


5 Step
WAA283
(formerly A283)

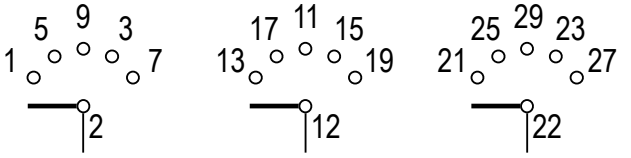


6 Step
WAA284
(formerly A284)

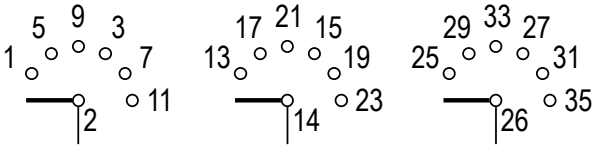


Numbers shown at the connection points on the above diagrams, correspond to the terminal numbers on the switch. The position of connection points correspond to the positions indicated on the face plate.

# ON/OFF Switches

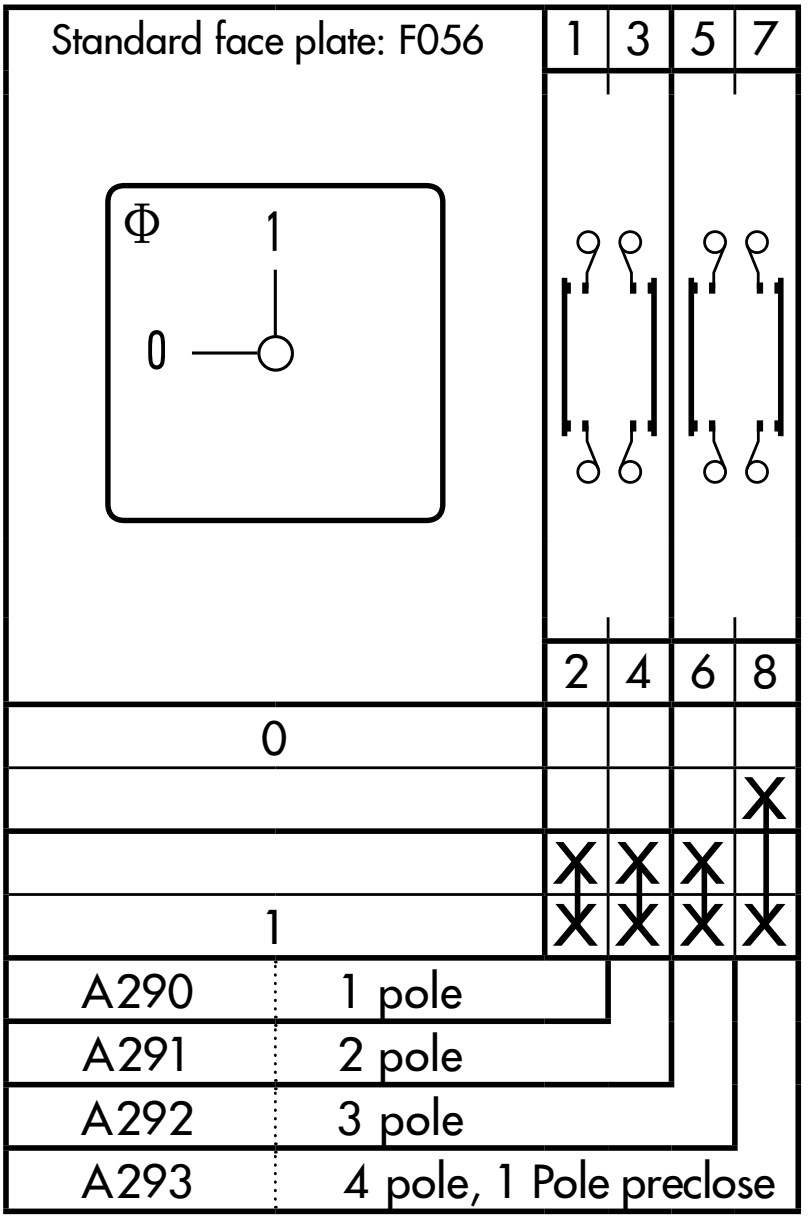


A290 up to A293
ON/OFF Switches 90° Switching

# Double-throw Switches

Standard face plate: F057

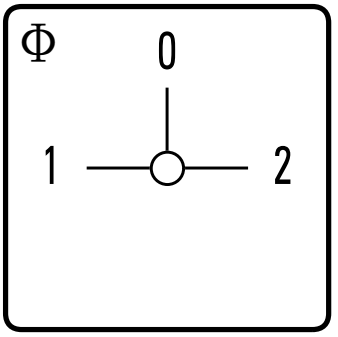


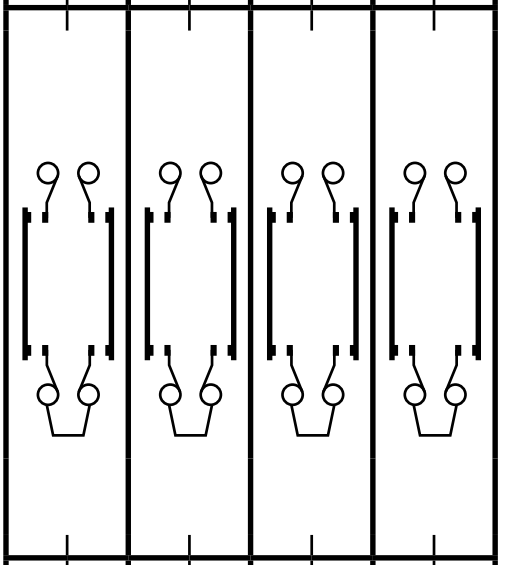

| | 1 | 3 | 5 | 7 | 9 | 11 | 13 | 15 |
|---|---|---|---|---|---|---|---|---|
| | 2 | 4 | 6 | 8 | 10 | 12 | 14 | 16 |
| 1 | X | | X | | X | | X | |
| | X | | X | | X | | | |
| | | | | | | | X | |
| 0 | | | | | | | | |
| | | | | | | | | X |
| | | X | | X | | X | | |
| 2 | | X | | X | | X | | X |

WAA294 4 pole, 1 Pole preclose

WAA294 Double-throw Switch with „OFF“,
(formerly A294) 90° Switching

# Double-throw Switches

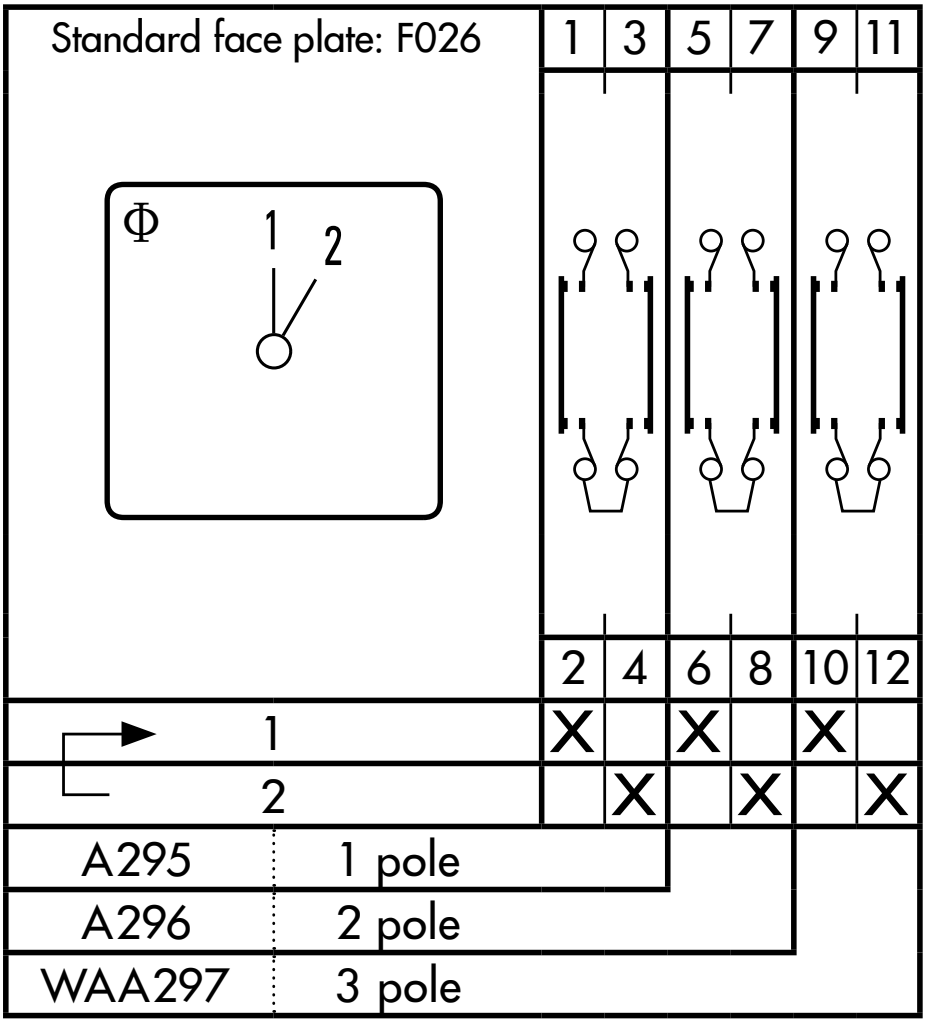


A295* up to WAA297 (formerly A297)
Double-throw Switches without „OFF“,
with spring return, 30° Switching

*Electrically isolated contacts see page 86

# Double-throw Switches

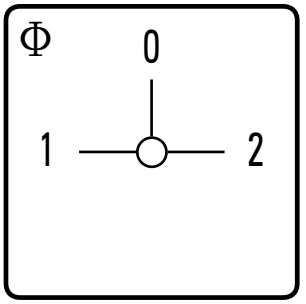


| Standard face plate: F057 | 1 | 3 | 5 | 7 | 9 | 11 |
|---|---|---|---|---|---|---|
| | 2 | 4 | 6 | 8 | 10 | 12 |
| 1 | X | | X | | X | |
| | X | | X | | X | |
| | | | | | | |
| 0 | | | | | | |
| | | | | | | |
| | | X | | X | | X |
| 2 | | X | | X | | X |
| WAA299 | | | | | | |

WAA299 Double-throw Switch with „OFF“
(formerly A299) 90° Switching, 3 pole

# General Application Switches

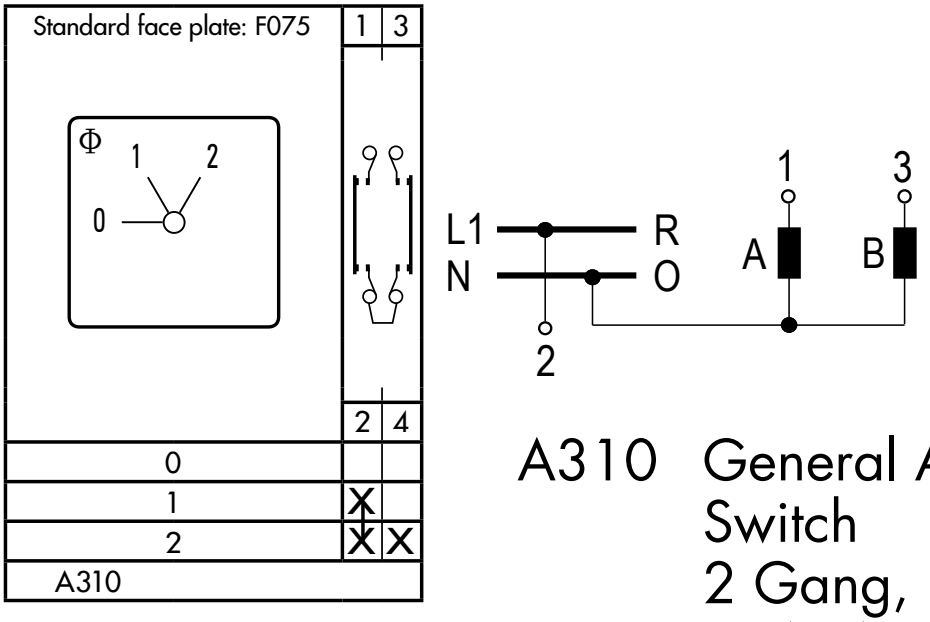


A310 General Application Switch
2 Gang, 1 pole
0, A, A+B

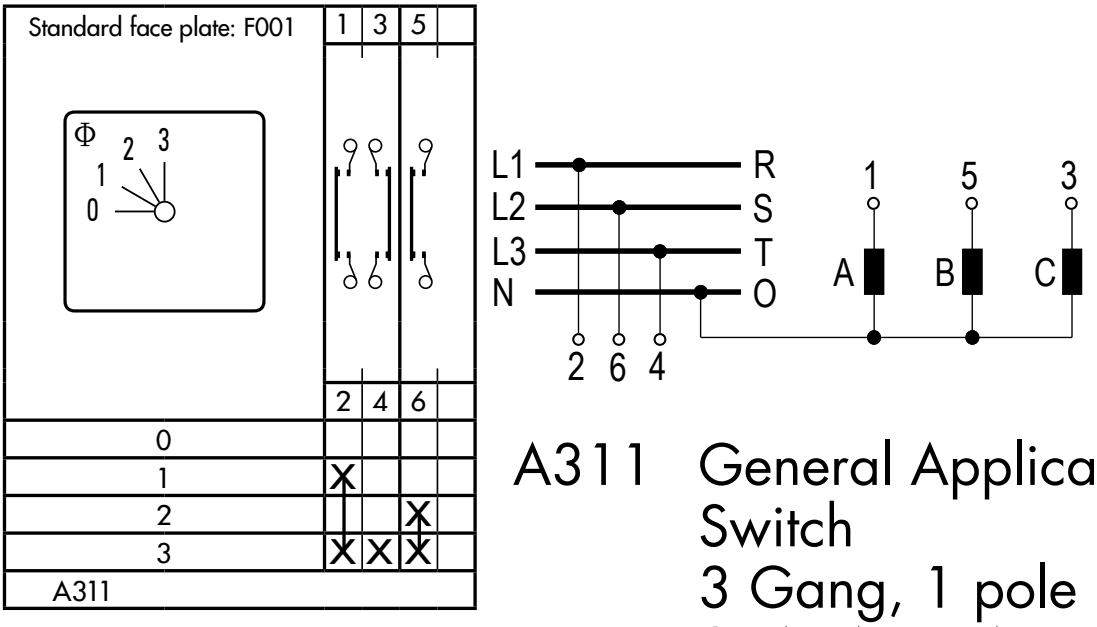


A311 General Application Switch
3 Gang, 1 pole
0, A, A+B, A+B+C

# General Application Switches

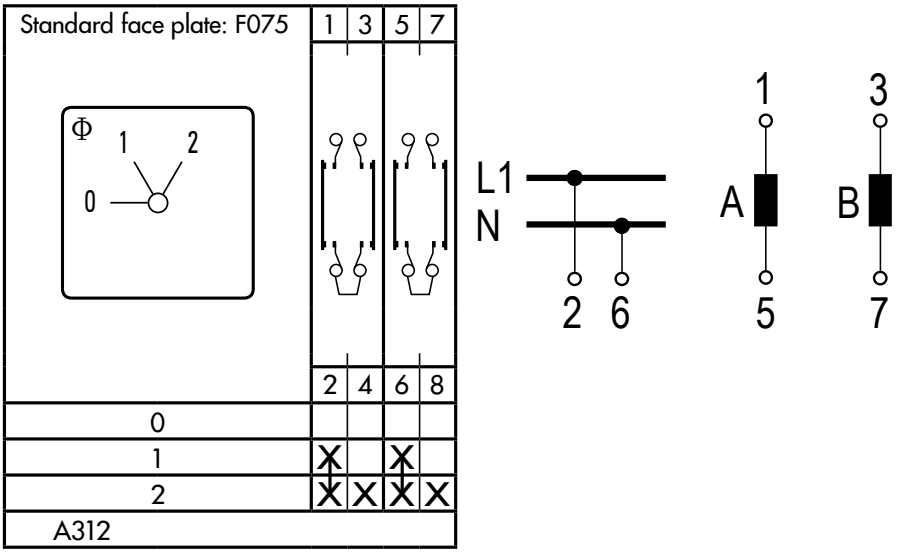


A312 General Application Switch
2 Gang, 2 pole
0, A, A+B

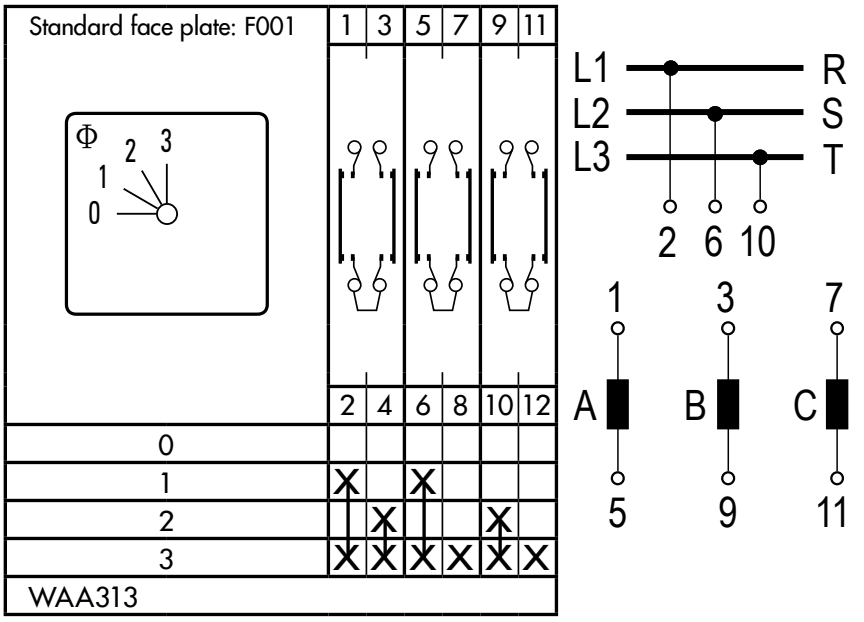


WAA313 General Application Switch
(formerly A313) 3 Gang, 2 pole
0, A, A+B, A+B+C

# General Application Switches

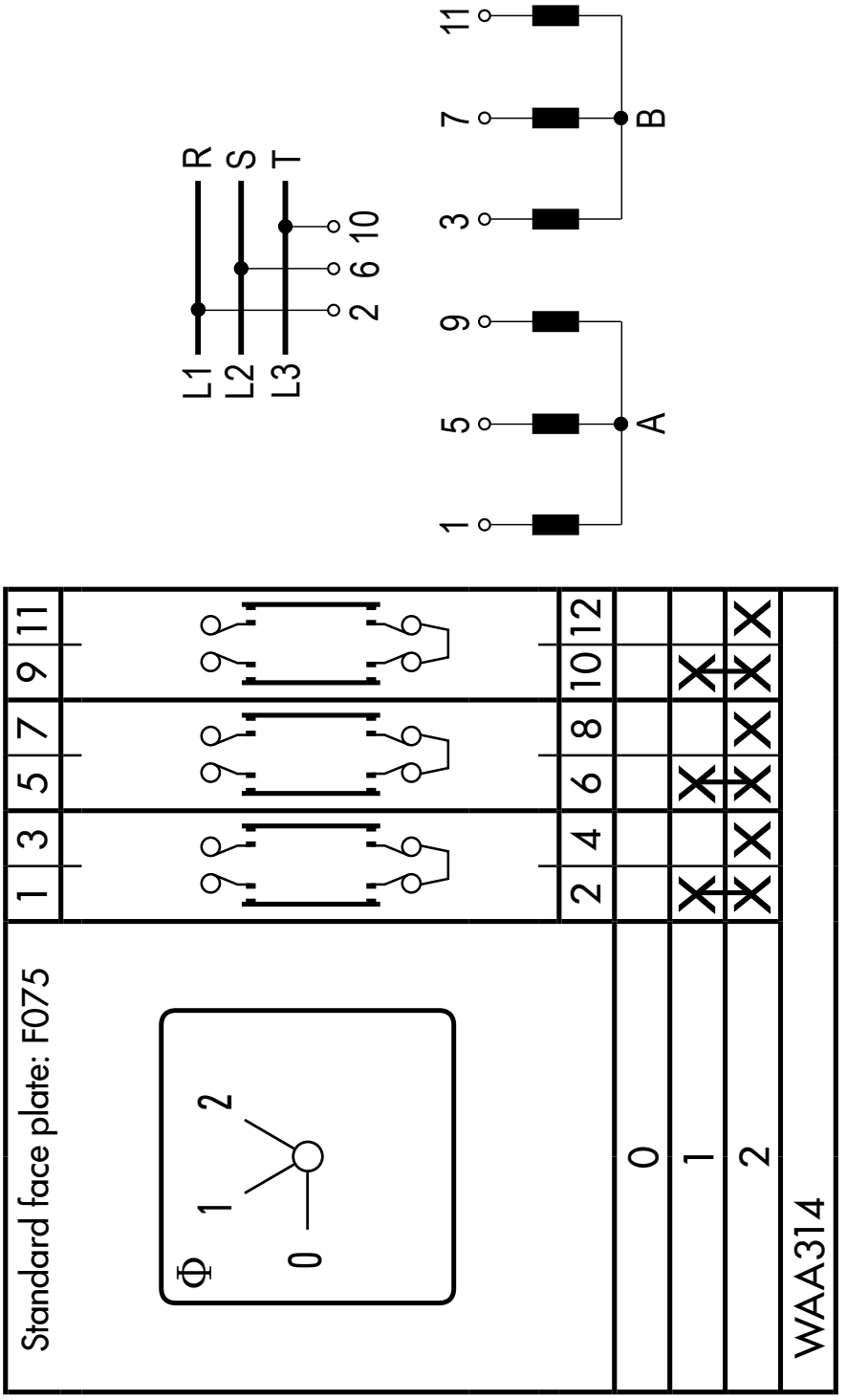


WAA314 General Application Switch
(formerly A314) 2 Gang, 3 pole
0, A, A+B

# General Application Switches

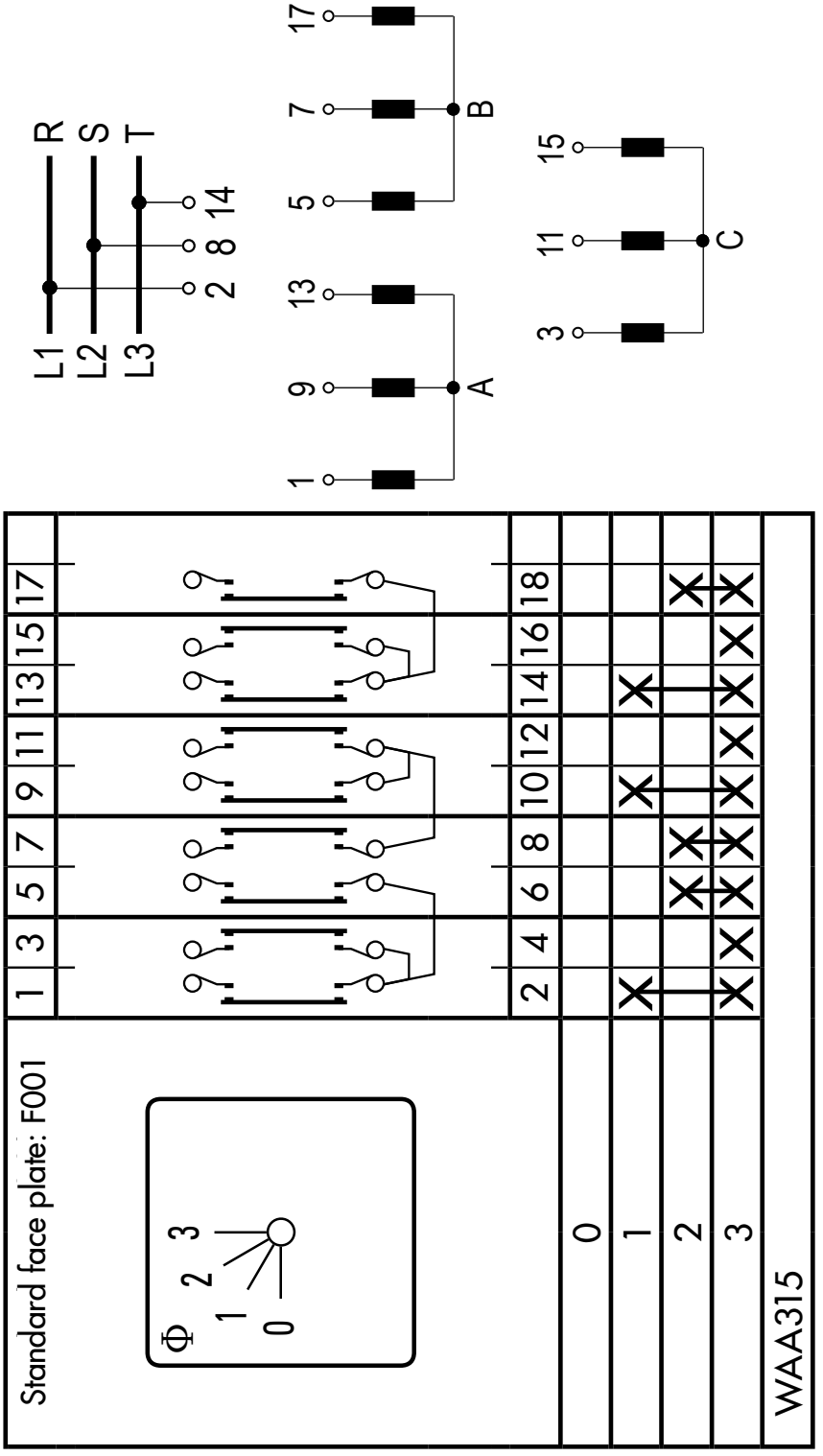


WAA315 General Application Switch
(formerly A315) 3 Gang, 3 pole
0, A, A+B, A+B+C

# Double-throw Switches

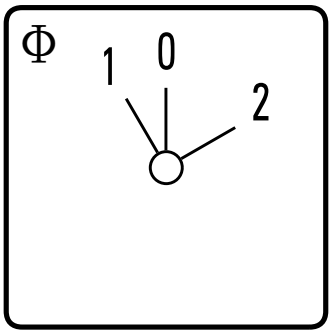


Standard face plate: F341

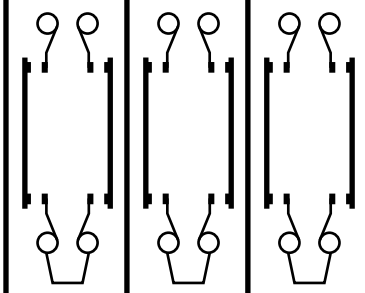

| | 1 | 3 | 5 | 7 | 9 | 11 |
|---|---|---|---|---|---|---|
| | 2 | 4 | 6 | 8 | 10 | 12 |
| 1 | | X | | X | | X |
| 0 | | | | | | |
| | | | | | | |
| 2 | X | | X | | X | |
| | | | | | | |
| | | | | | | |
| | | | | | | |

| | |
|---|---|
| A320 | 1 pole |
| A321 | 2 pole |
| A322 | 3 pole |

A320 up to A322
Double-throw Switches with „OFF“ with spring return from left to center

# ON/OFF Switches

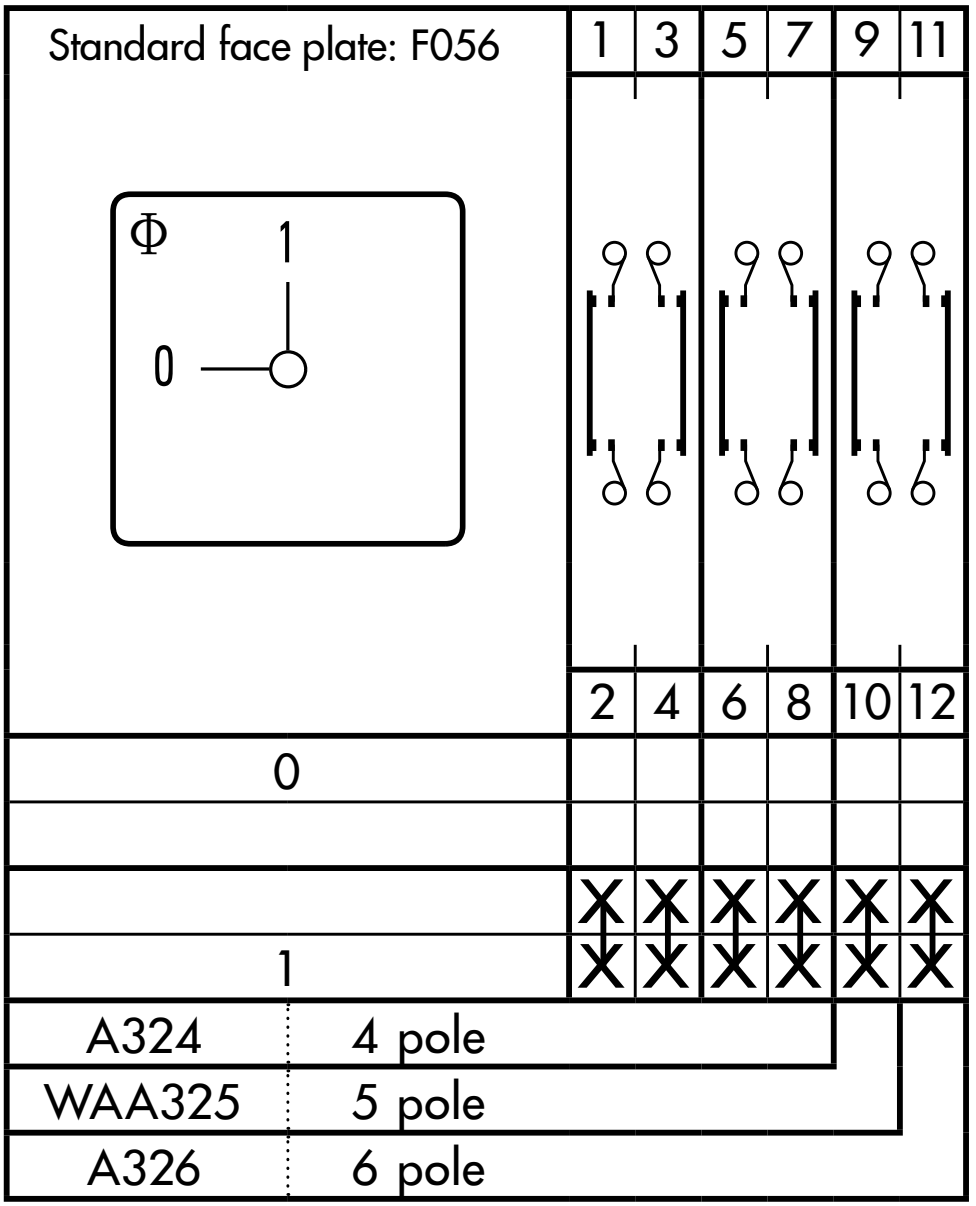


A324 up to A326
ON/OFF Switches, 90° Switching

# 2 Gang Series Switching

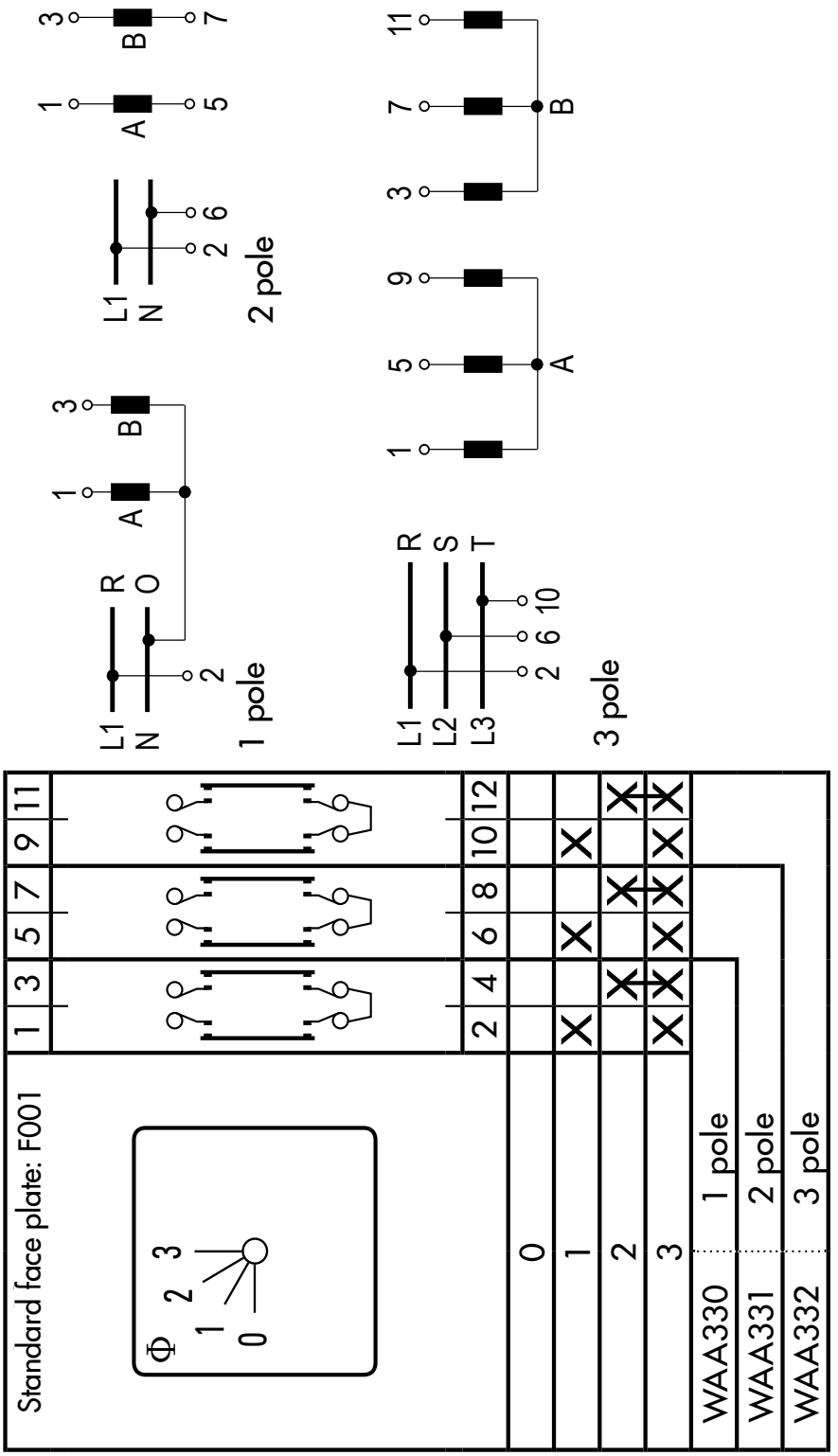


WAA330 up to WAA332 2 Gang Series Switching
(formerly A330 up to A332) 0,A,B,A+B

# ON/OFF Switches

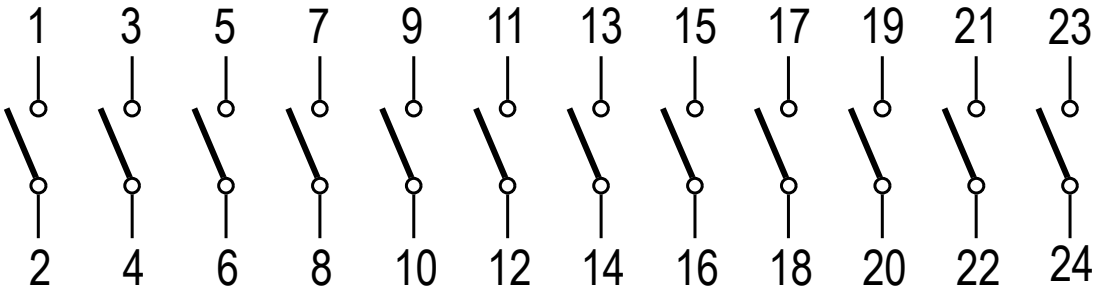


| | |
|---|---|
| WAA341 (formerly A341) | 5 pole |
| A342 | 6 pole |
| A343 | 7 pole |
| A344 | 8 pole |
| WAA345 (formerly A345) | 9 pole |
| A346 | 10 pole |
| WAA347 (formerly A347) | 11 pole |
| A348 | 12 pole |

ON/OFF Switches, 60° Switching

# Double-throw Switches

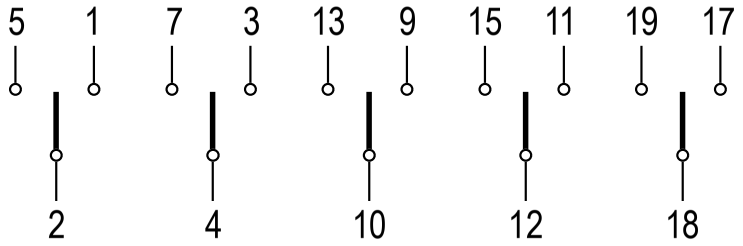


5 pole

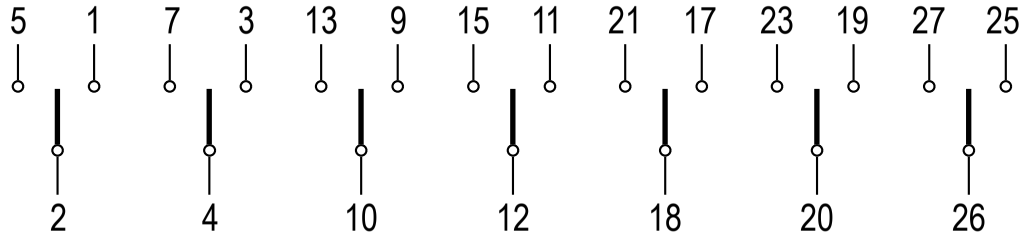


6 and 7 pole

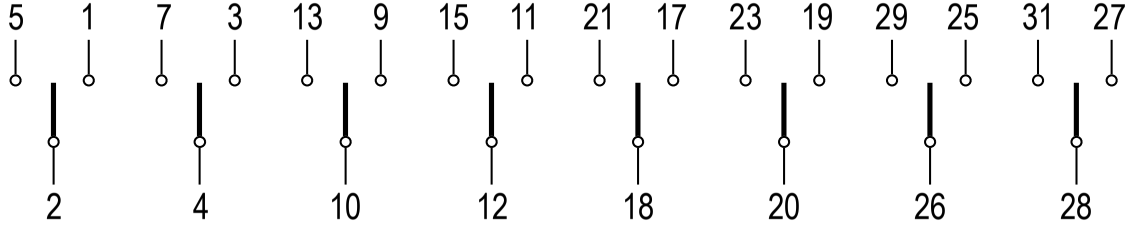


8 pole

Double-throw Switches with „OFF“ 60° Switching

A361 5 pole
A362 6 pole
WAA363 (formerly A363) 7 pole
WAA364 (formerly A364) 8 pole

# Double-throw Switches

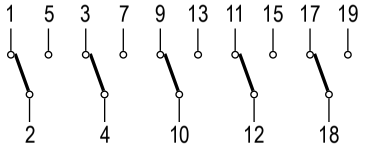


5 pole

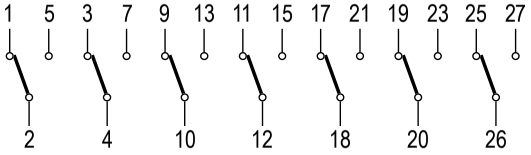


6- and 7 pole

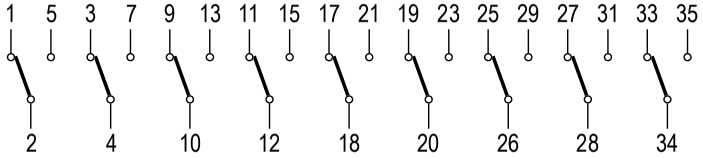


8- and 9 pole

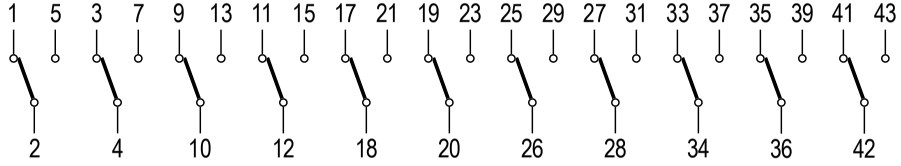


10- and 11 pole

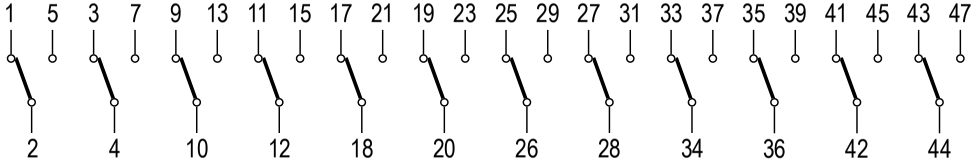


12 pole

## Double-throw Switches without „OFF“, 60° Switching

| | | | |
|---|---|---|---|
| A369 5 pole | A371 7 pole | WAA373 9 pole (formerlyA373) | WAA375 11 pole (formerlyA375) |
| A370 6 pole | A372 8 pole | WAA374 10 pole (formerlyA374) | WAA376 12 pole (formerlyA376) |

# Motor Switches

Standard face plate: F071

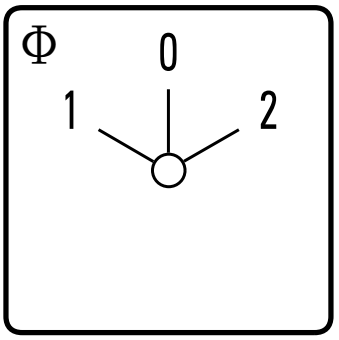


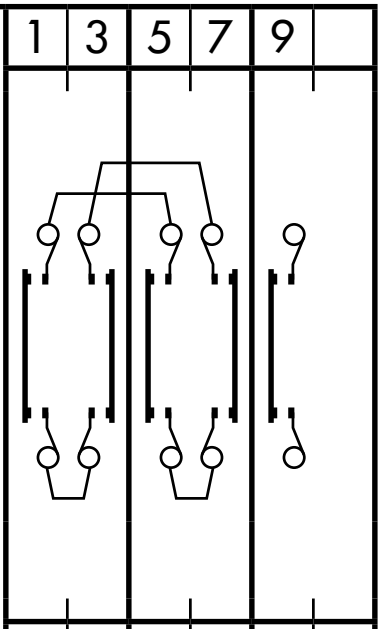


| | 2 | 4 | 6 | 8 | 10 |
|---|---|---|---|---|---|
| 1 | | X | X | | X |
| 0 | | | | | |
| 2 | X | | | X | X |

| | |
|---|---|
| A400 | 2 pole |
| A401 | 3 pole |

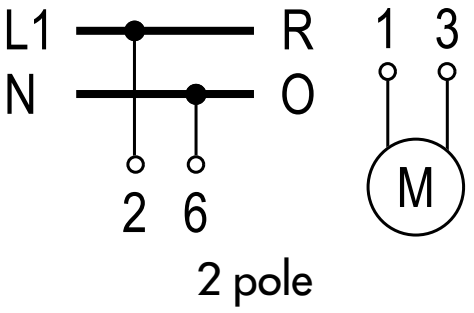


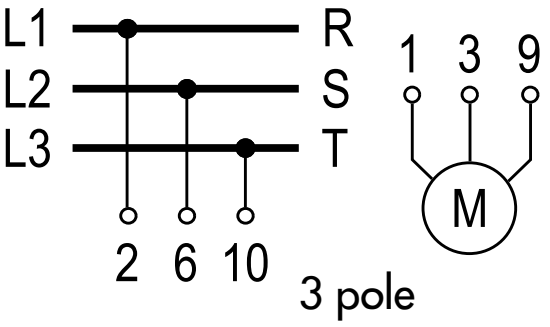


## A400, A401 Motor Reversing Switches

With spring return to „OFF“ see page 37

# Motor Switches

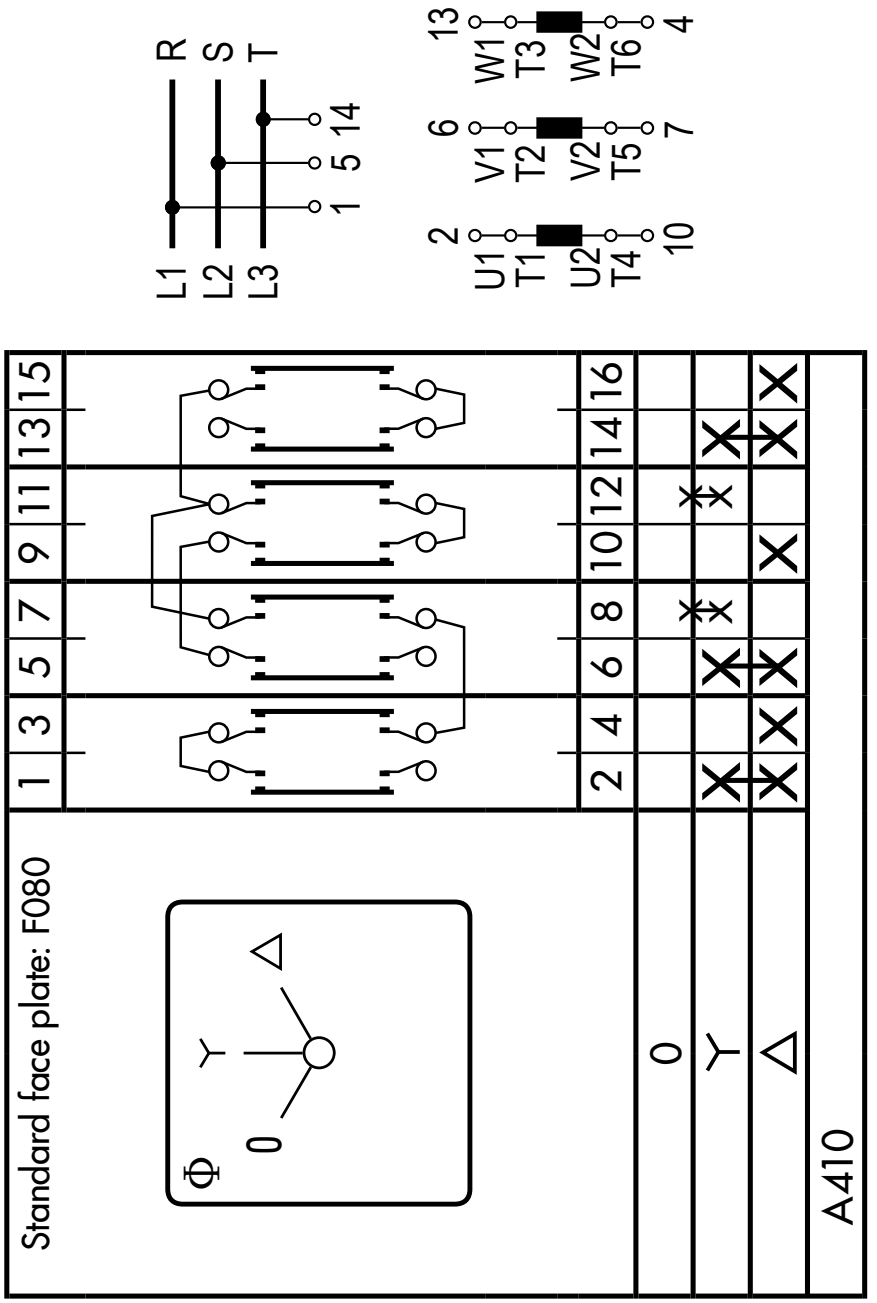


A410 Star-delta Switch

# Motor Switches

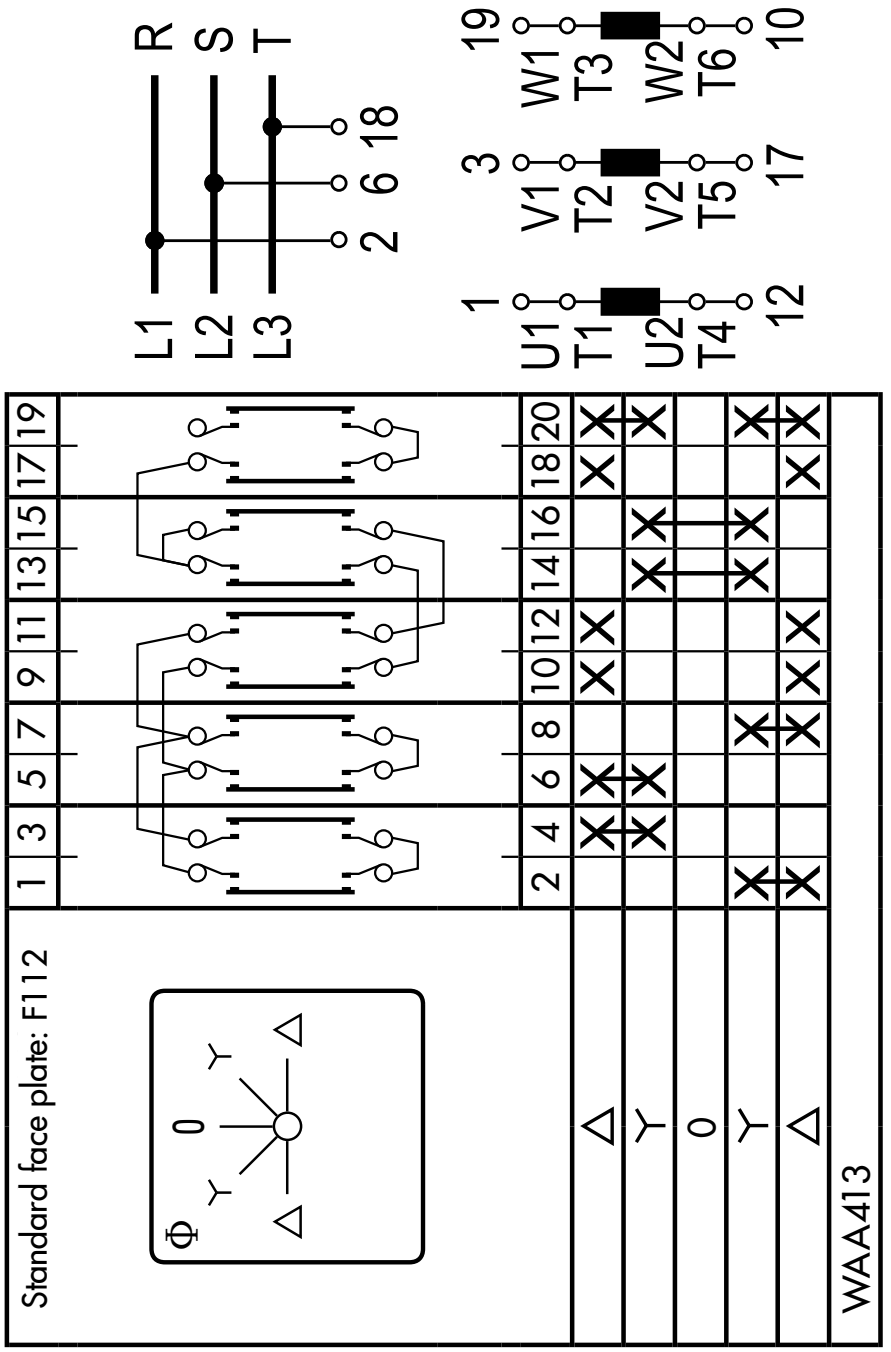


WAA413 Star-delta Switch
(formerly A413) Reversing

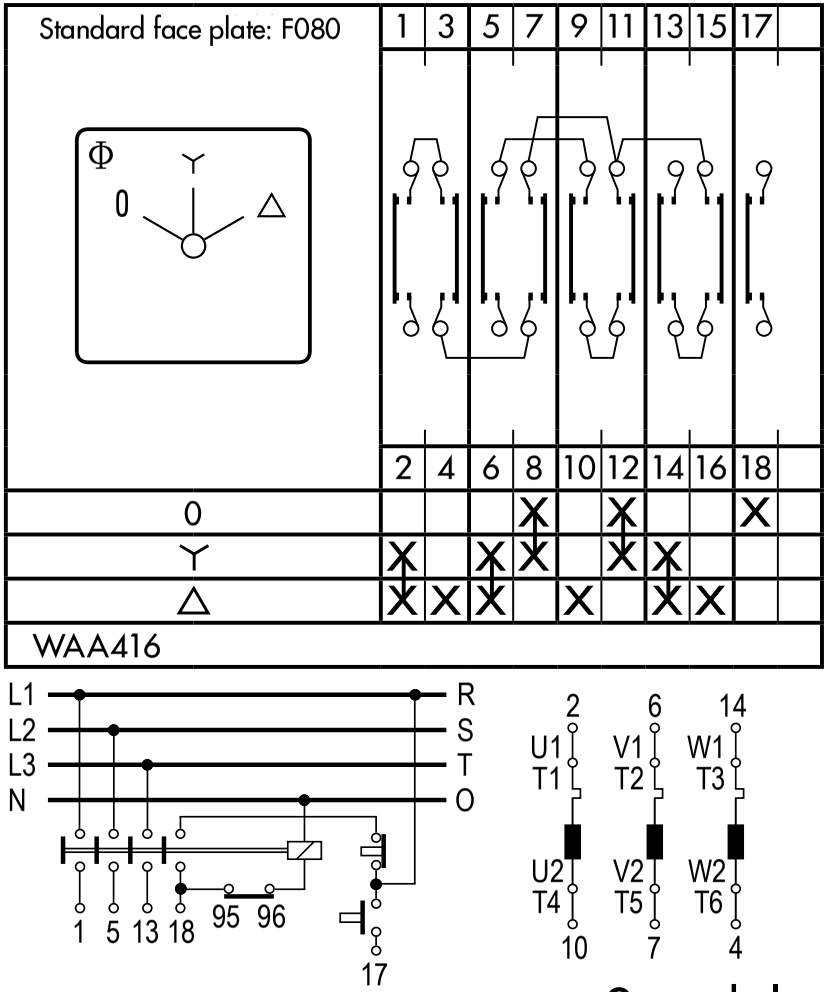


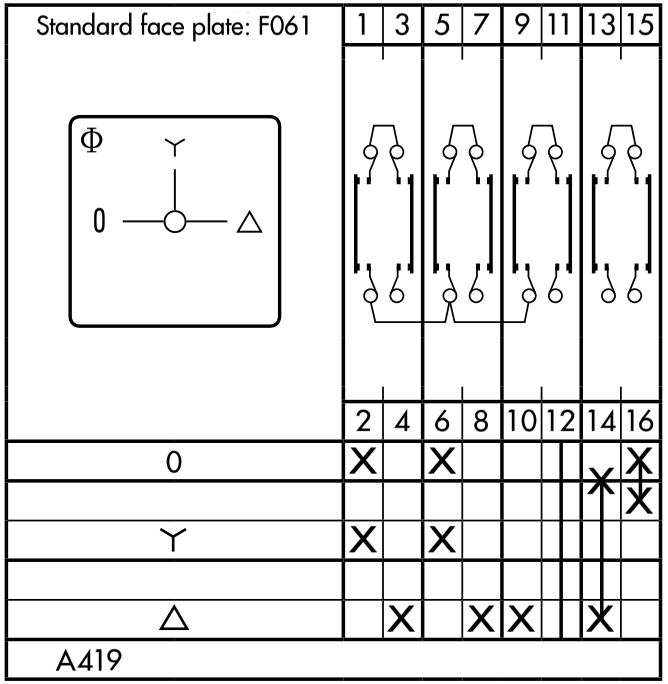


## Star-delta Switches

**WAA416** (formerly A416) With auxiliary contact, closed in „OFF“ position

**A419** For use with reversing contactors

# Motor Switches

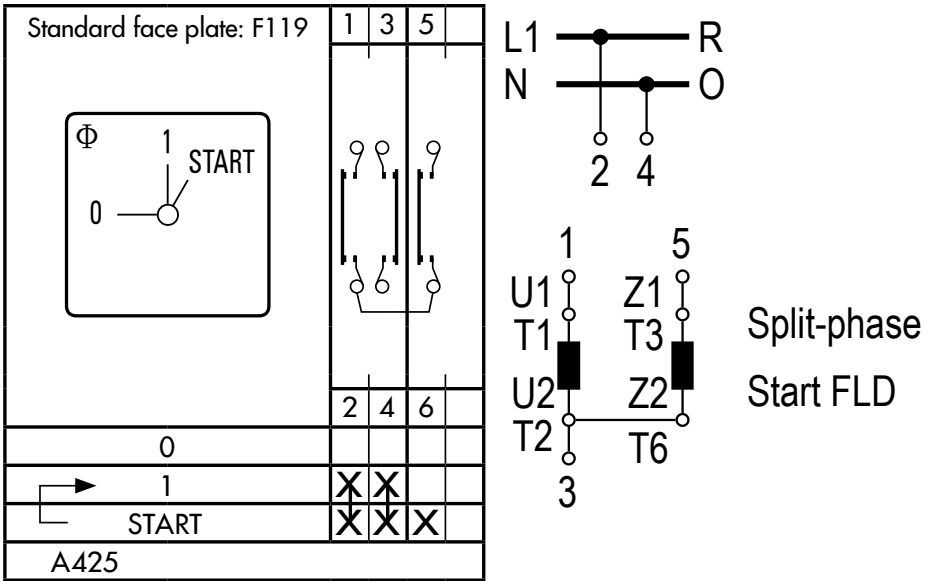


A425 Start and Run Switch
Split-phase start

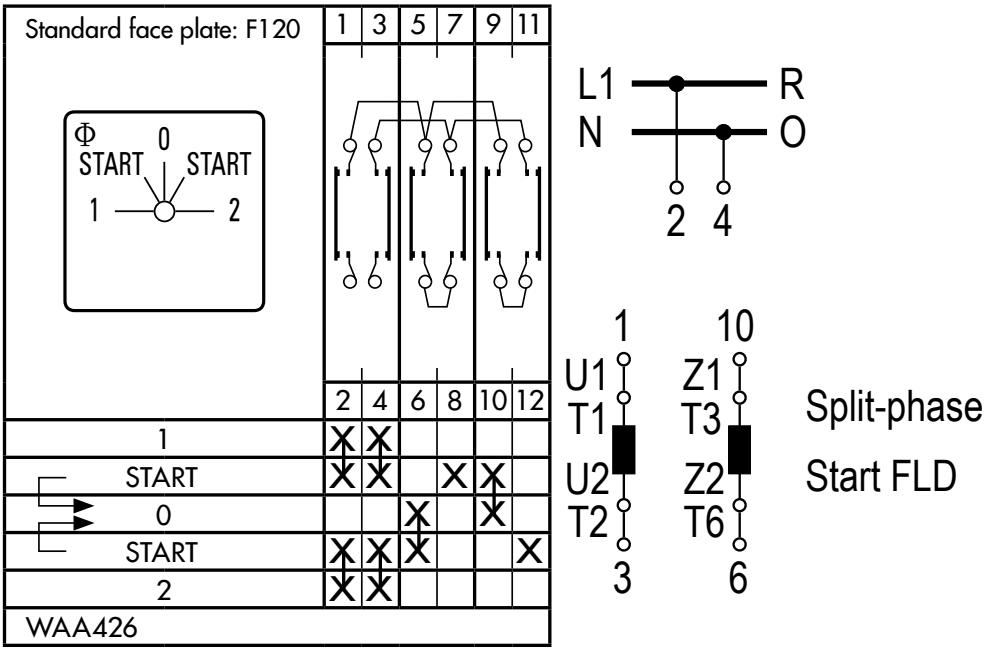


WAA426 Start and Run Switch
(formerly A426) Split-phase start reversing

# Motor Switches

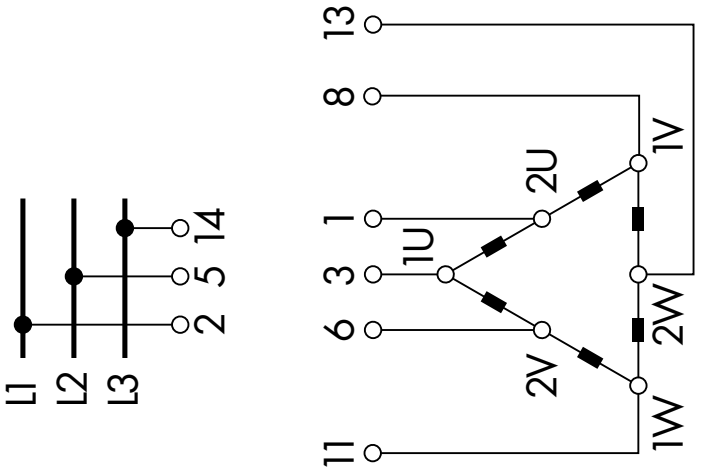


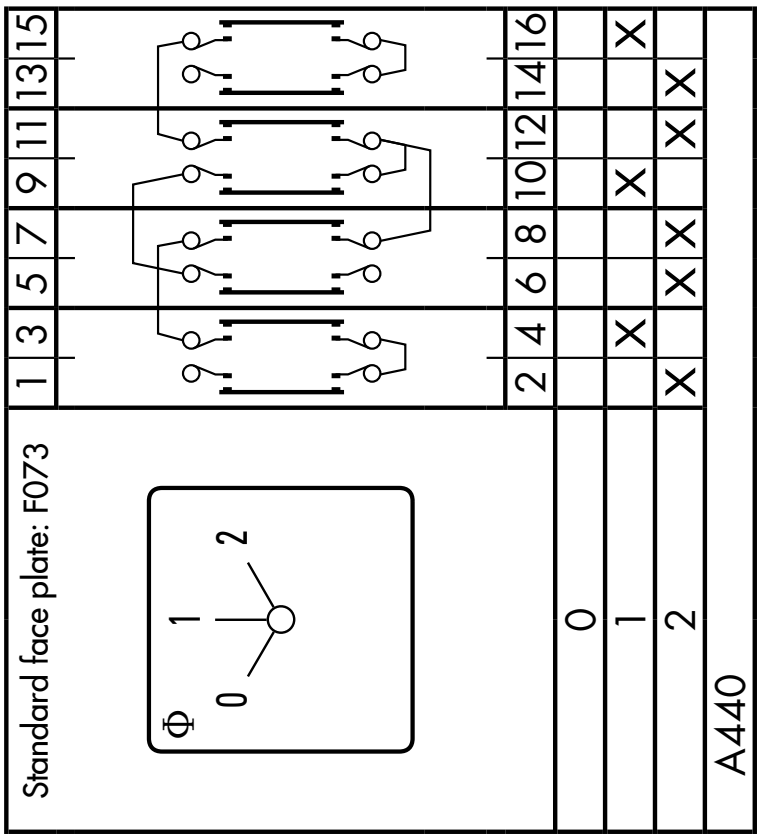


A440 2 speed, single winding
0 - AΔ -A⋎⋎
A441 AΔ - 0 - A⋎⋎

without „OFF" see page 69

# Motor Switches

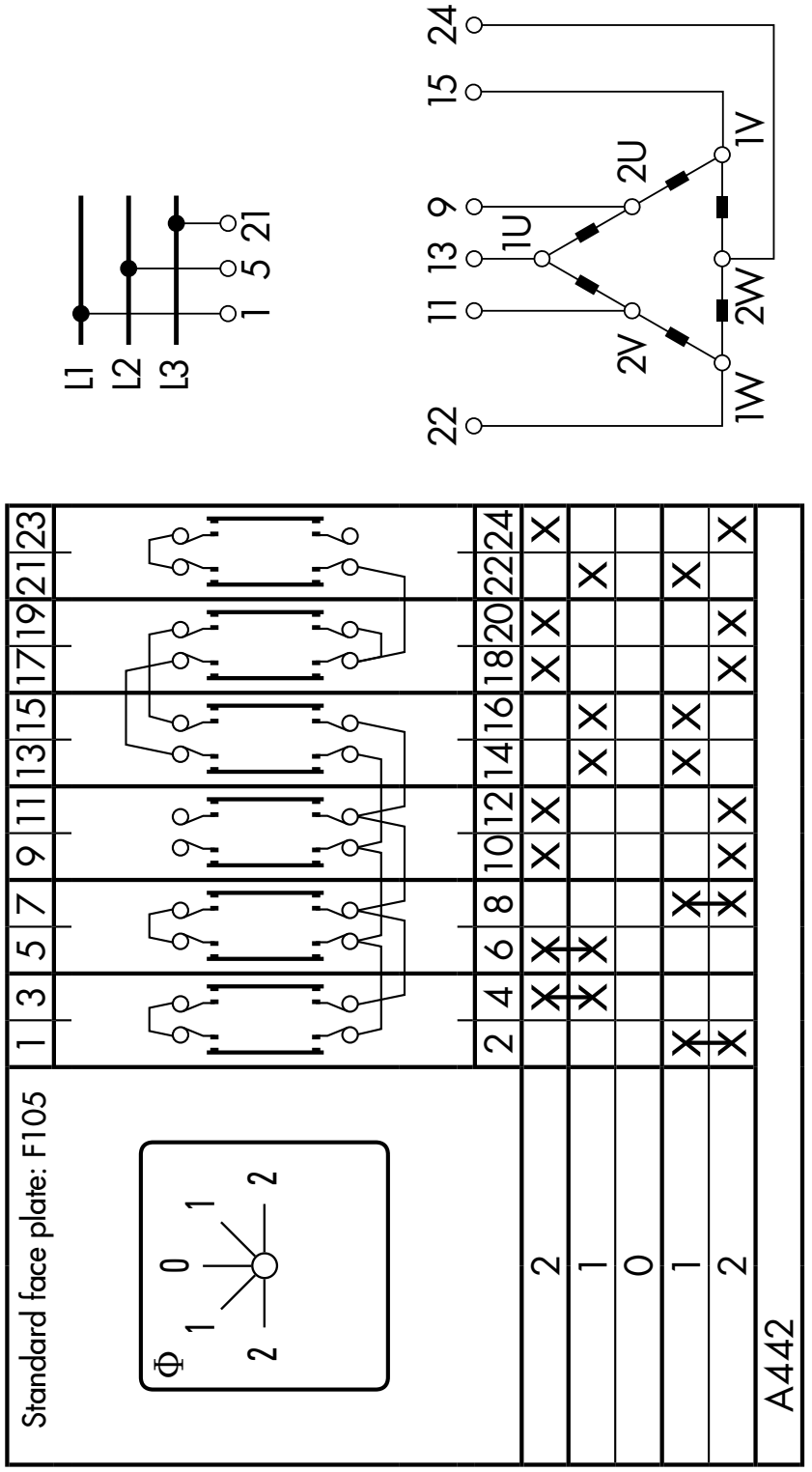


A442 2 speed, single winding with reverse
A⋎ - A∆ - 0 - A∆ - A⋎

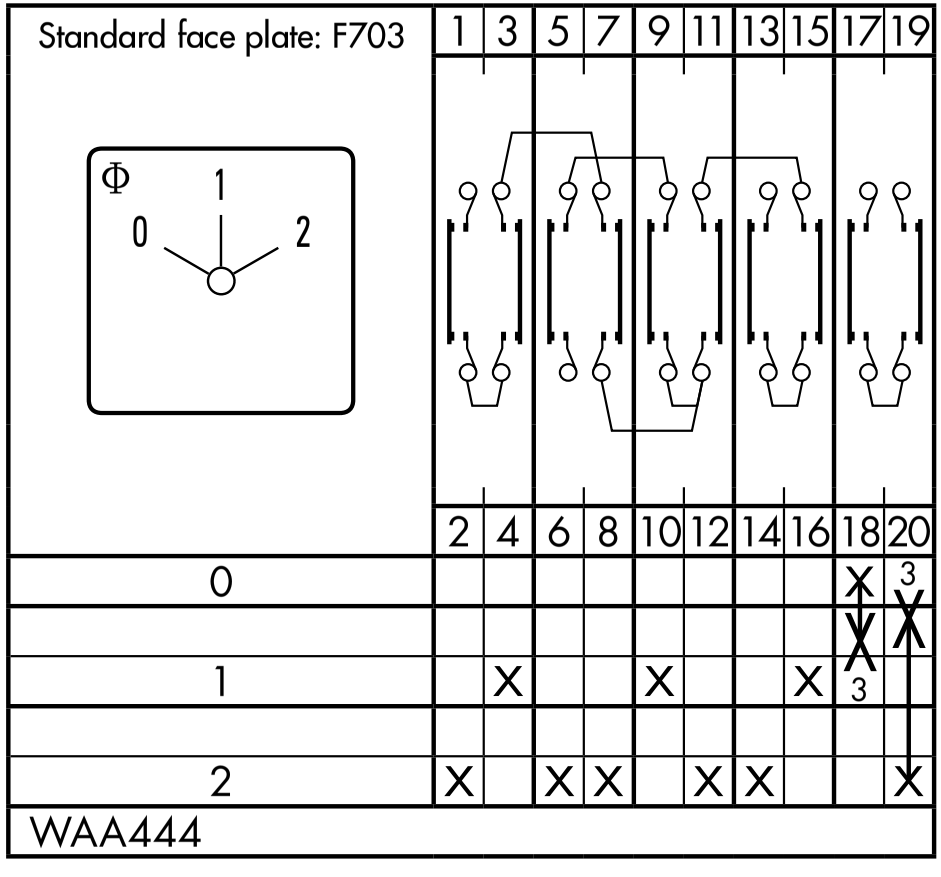


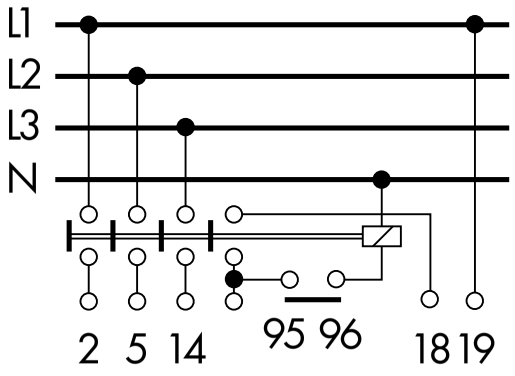


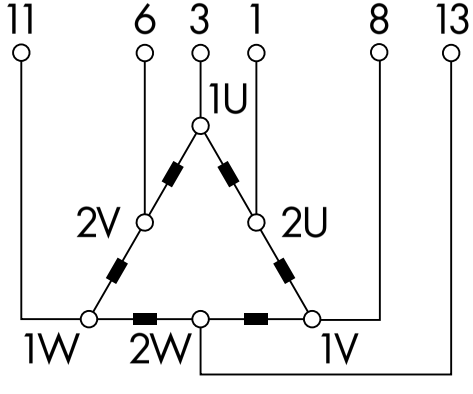




# WAA444 Motor Control Switch
(formerly A444) For use with reversing contactors

# Motor Switches

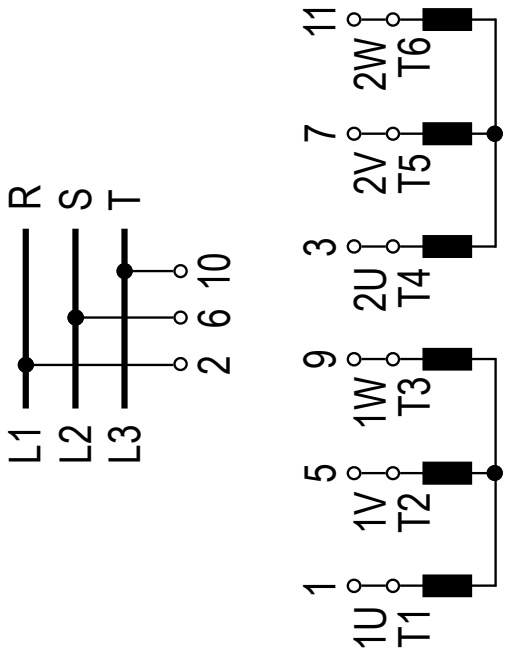


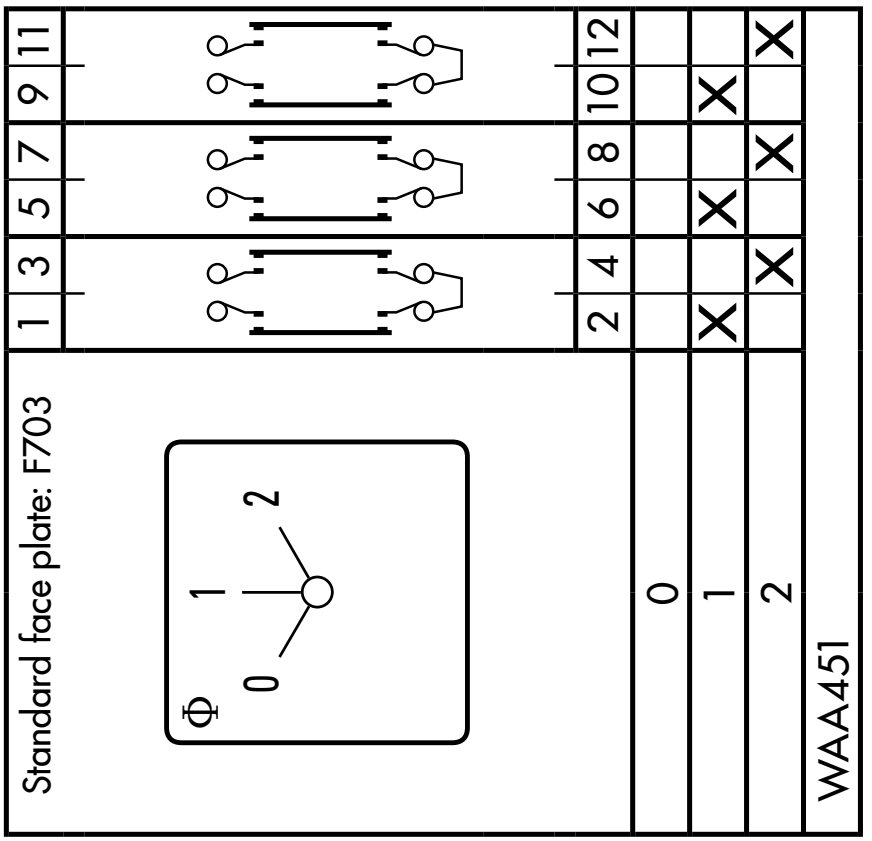


WAA451 Motor Control Switch
(formerly A451) 2 speed, 2 winding
0 - A - B, Y or Δ

# Motor Switches

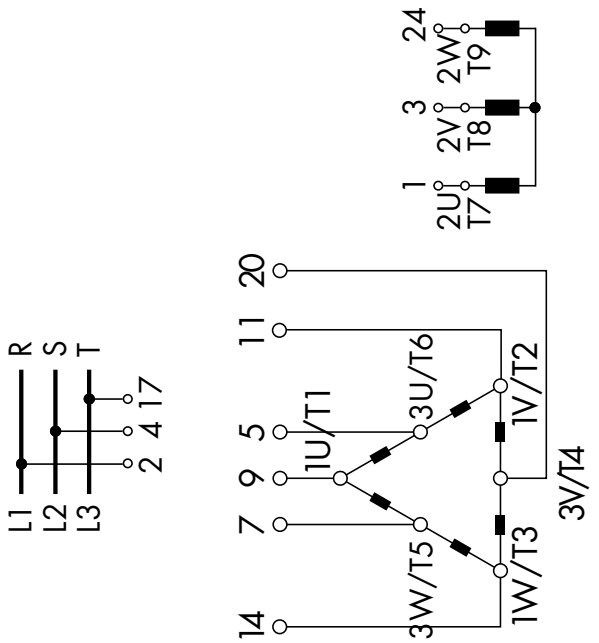


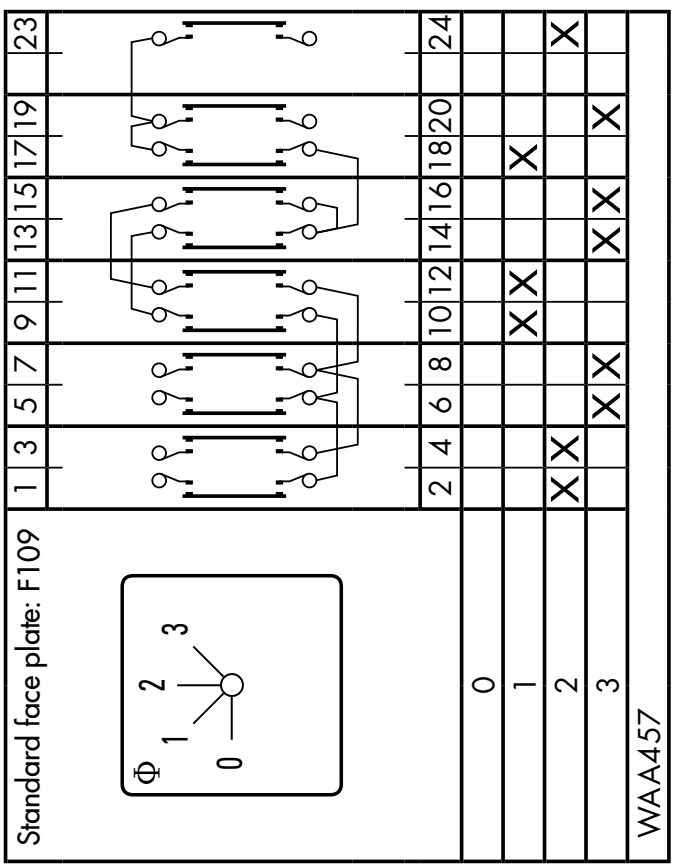


WAA457 Motor Control Switch
(formerly A457) 3 speed, 2 winding
0 - AΔ - BY - AYY

Standard face plate: F072

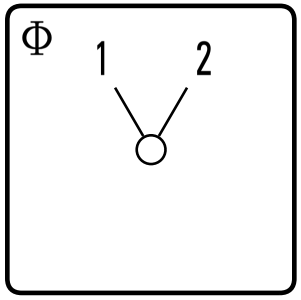


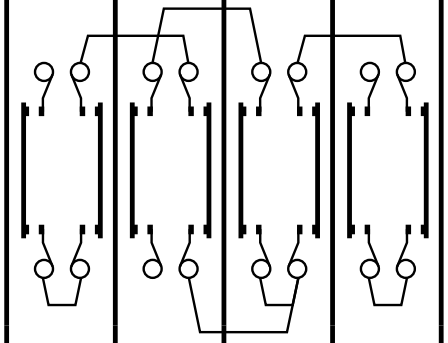

| | 1 | 3 | 5 | 7 | 9 | 11 | 13 | 15 |
|---|---|---|---|---|---|---|---|---|
| | 2 | 4 | 6 | 8 | 10 | 12 | 14 | 16 |
| 1 | | X | | | X | | | X |
| 2 | X | | X | X | | X | X | |
| A466 | | | | | | | | |

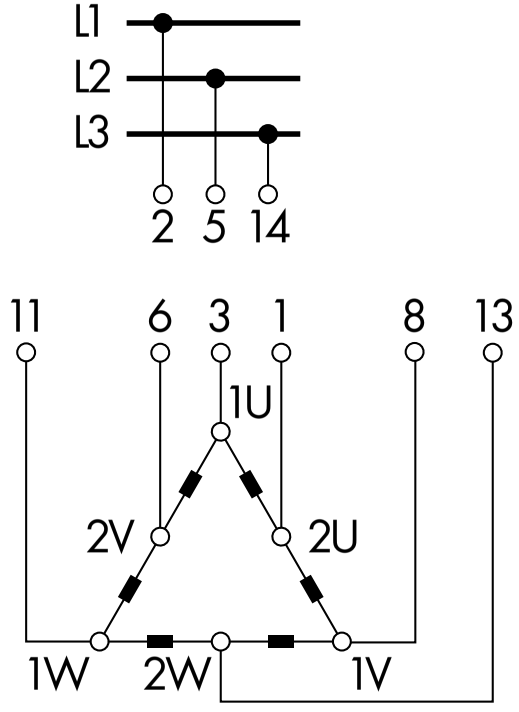


A466 2 speed, single winding without „OFF“
A△ - A⋎⋎

# Motor Switches

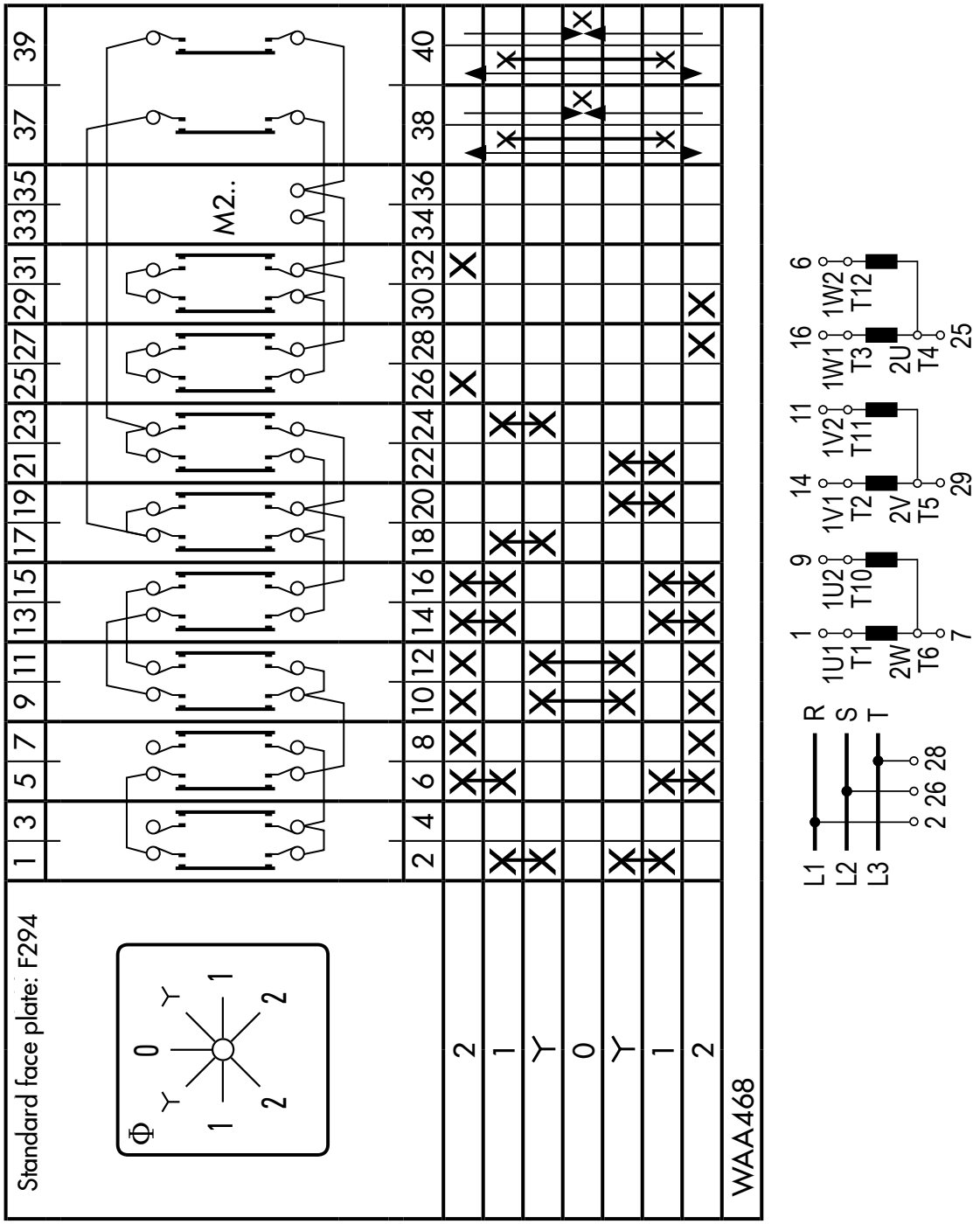


WAA468 Motor Control Switch
(formerly A468) 2 speed reversing for 2 way operation
with slip clutch for „OFF“ load use

# Multi-step Switches 4 pole without „OFF"

3 Step A476

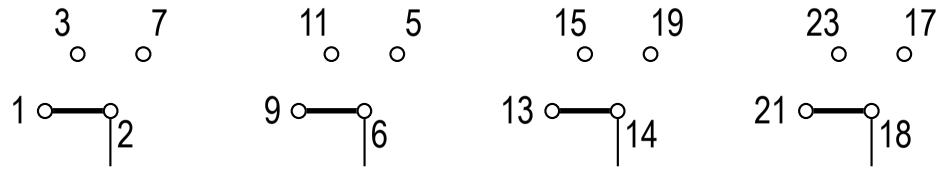


4 Step A477

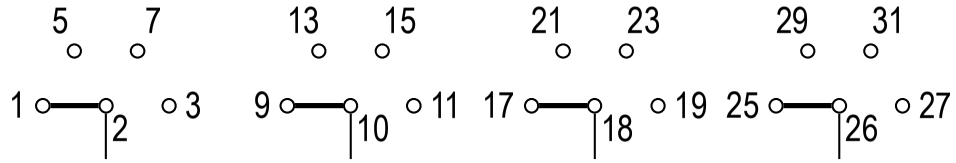


5 Step WAA478
(formerly A478)

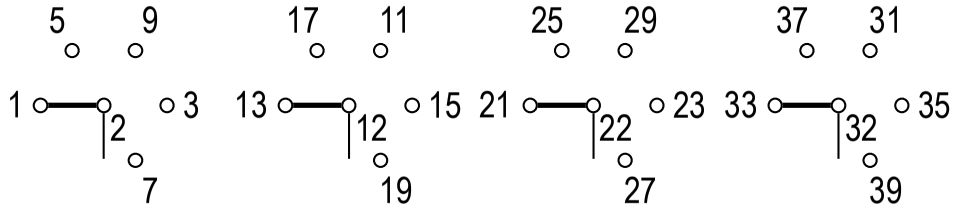


Numbers shown at the connection points on the above diagrams, correspond to the terminal numbers on the switch. The position of connection points correspond to the positions indicated on the face plate.

# Multi-step Switches 4 pole with „OFF"

2 Step

WAA480
(formerly A480)

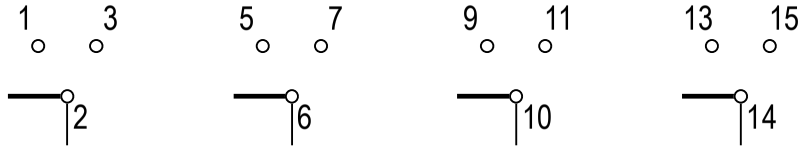


3 Step

WAA481
(formerly A481)

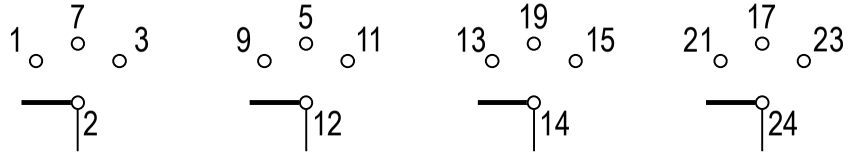


4 Step

WAA482
(formerly A482)

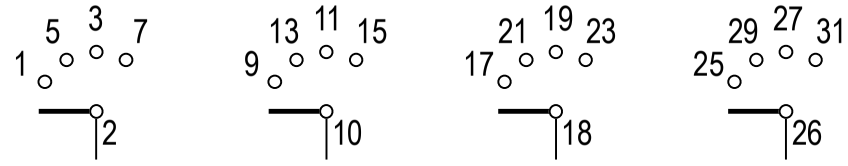


Numbers shown at the connection points on the above diagrams, correspond to the terminal numbers on the switch. The position of connection points correspond to the positions indicated on the face plate.

# Multi-step Switches 5 pole without „OFF"

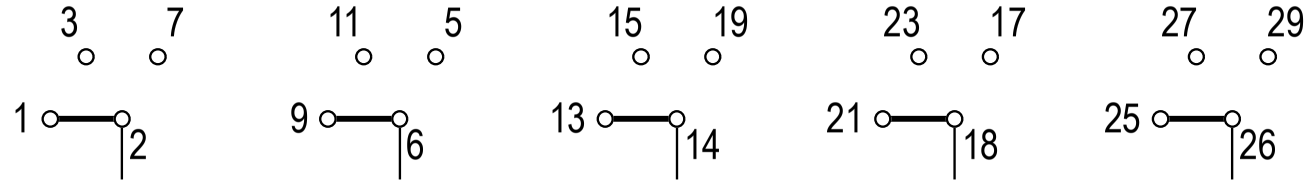


3 Step WAA484
(formerly A484)

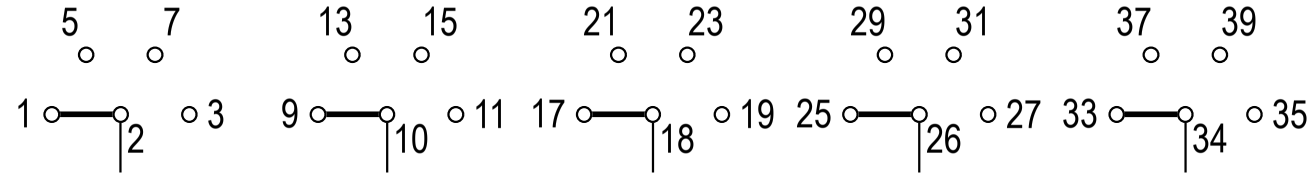


4 Step WAA485
(formerly A485)

Numbers shown at the connection points on the above diagrams, correspond to the terminal numbers on the switch. The position of connection points correspond to the positions indicated on the face plate.

# Multi-step Switches 5 pole with „OFF"

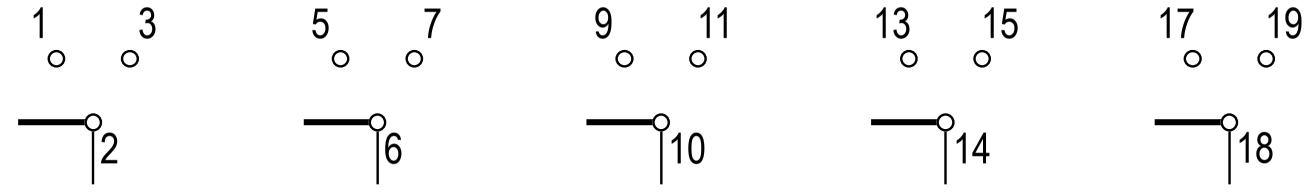


2 Step WAA486
(formerly A486)

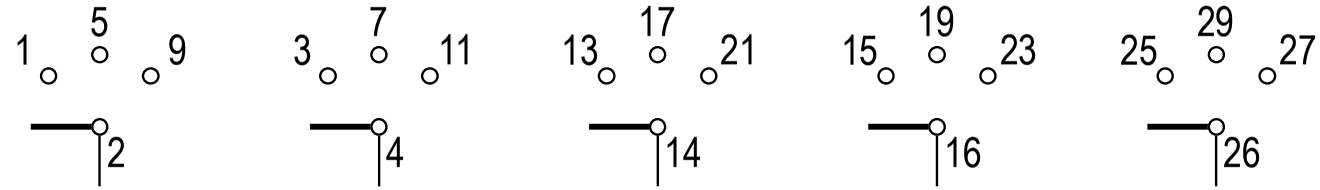


3 Step WAA487
(formerly A487)

Numbers shown at the connection points on the above diagrams, correspond to the terminal numbers on the switch. The position of connection points correspond to the positions indicated on the face plate

# Multi-step Switches 6 pole

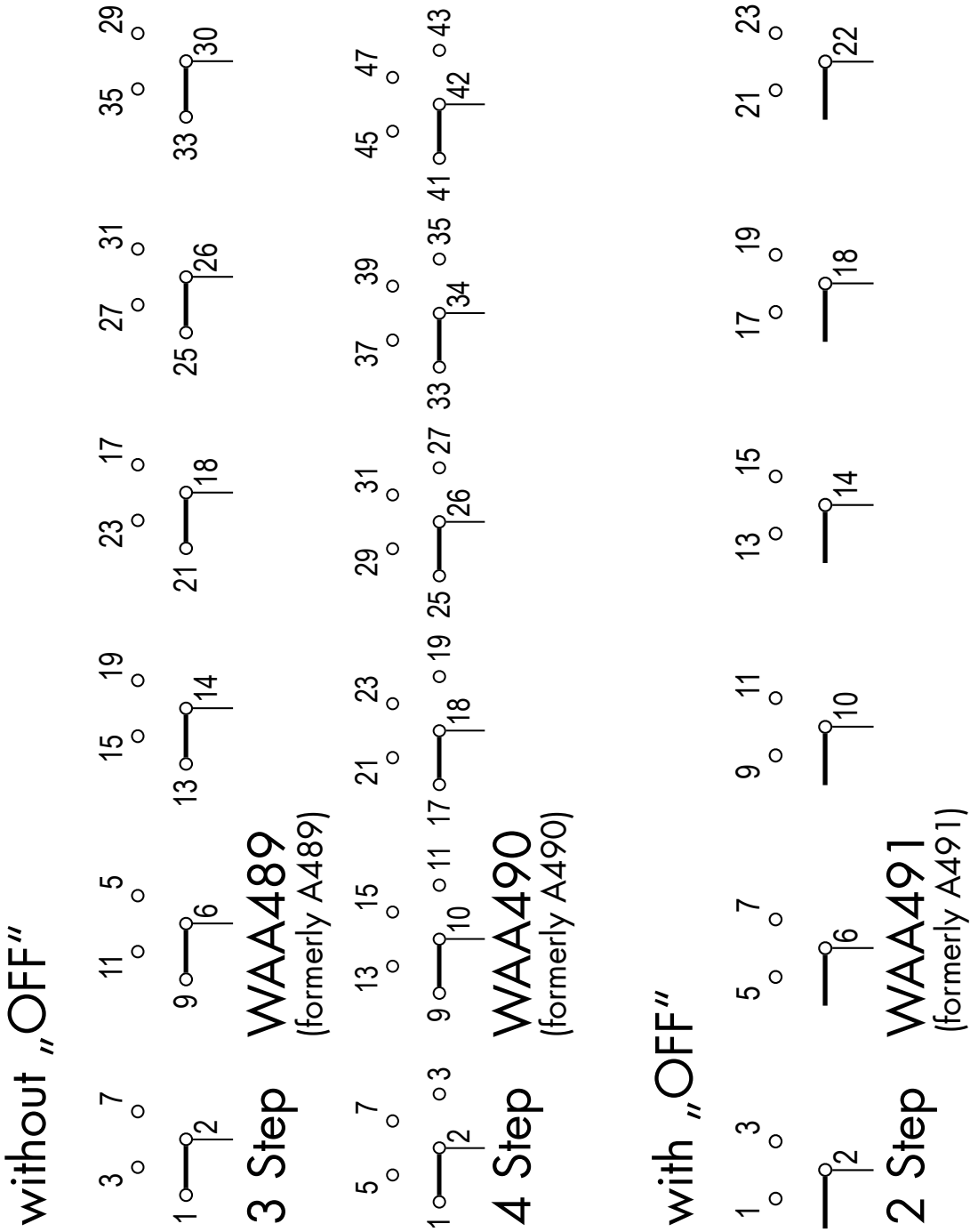


Numbers shown at the connection points on the above diagrams, correspond to the terminal numbers on the switch. The position of connection points correspond to the positions indicated on the face plate

# Coding Switches/Binary Code

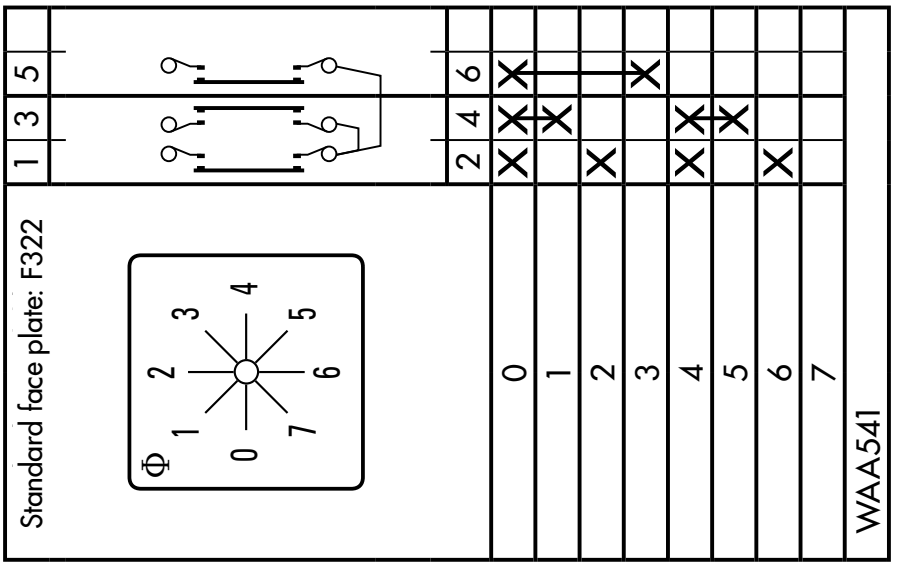


WAA541 0-7+complement
(formerly A541)

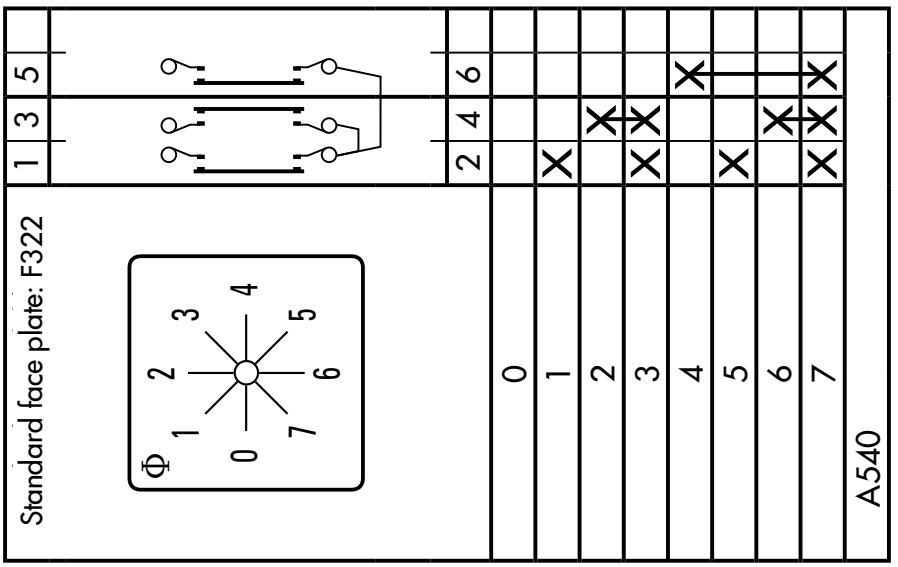


A540 0-7

# Coding Switches/Binary Code

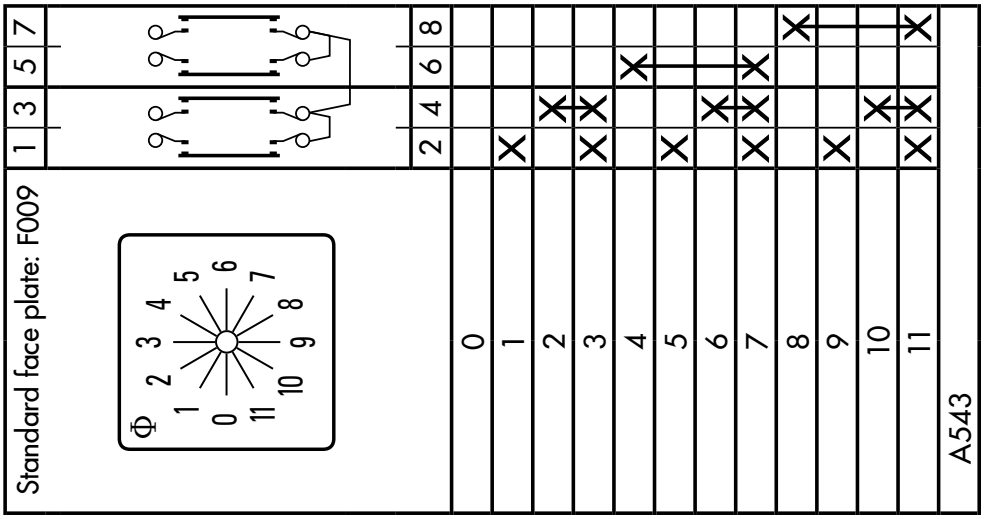


A543 0-11

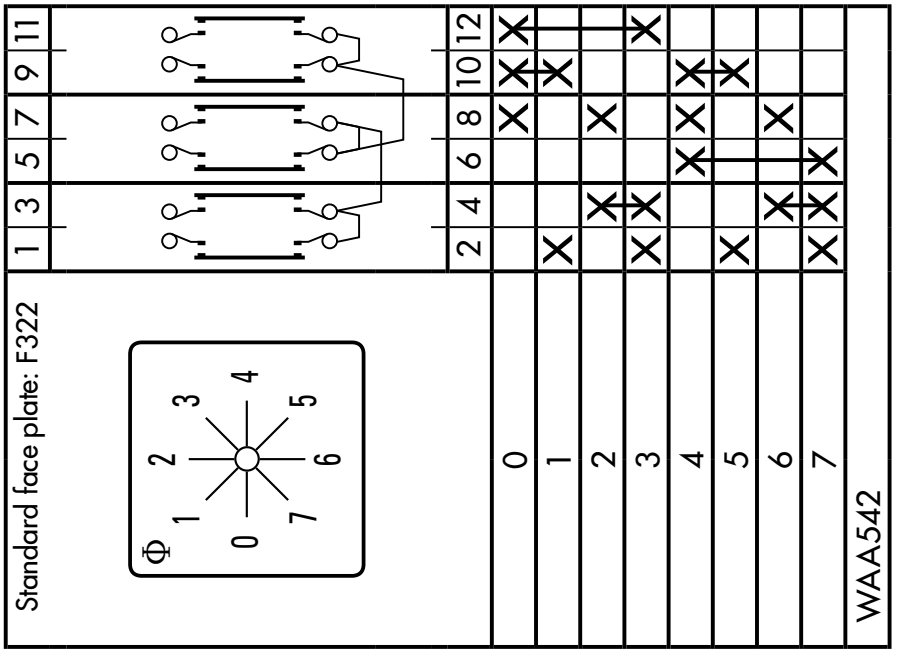


WAA542 0-7+complement
(formerly A542)

# Coding Switches/Binary Code

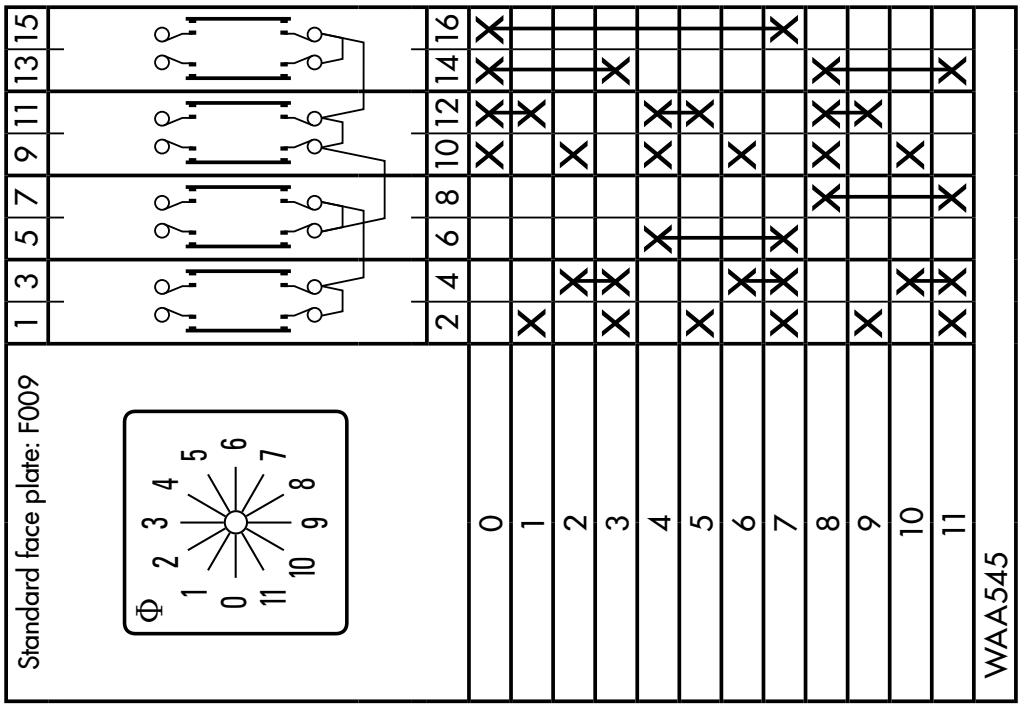


WAA545 0-11+complement
(formerly A545)

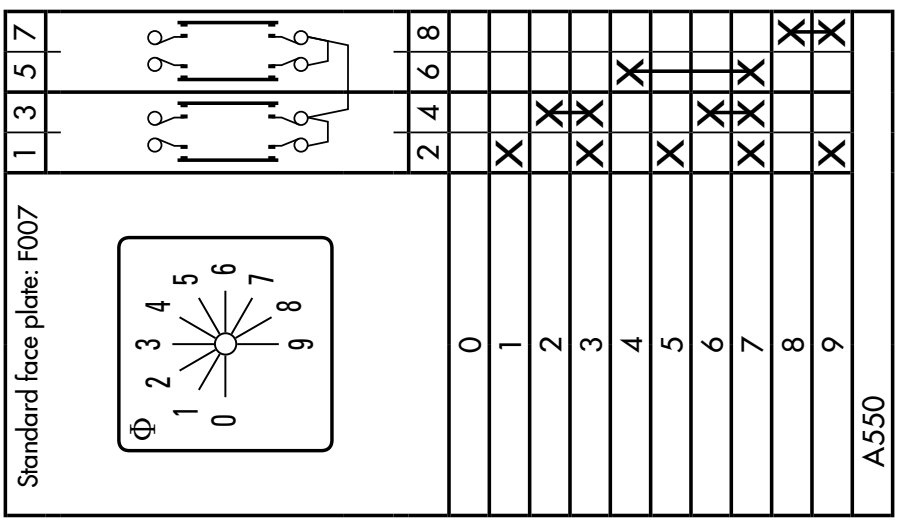


A550 0-9

# Coding Switches/BCD-Code

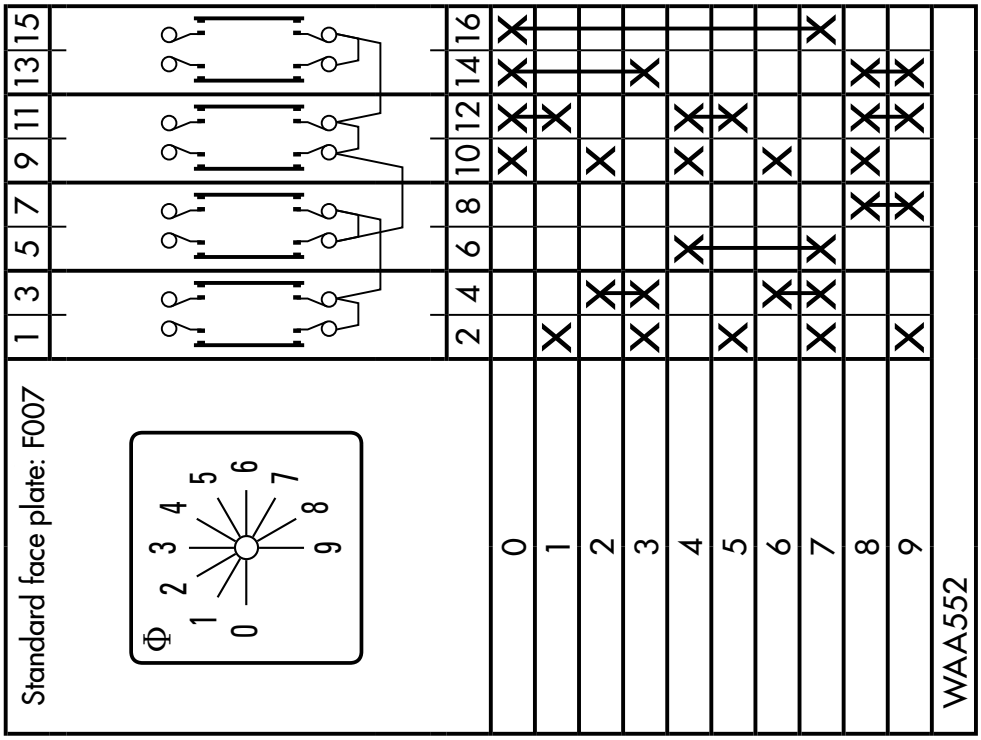


WAA552 0-9+complement
(formerly A552)

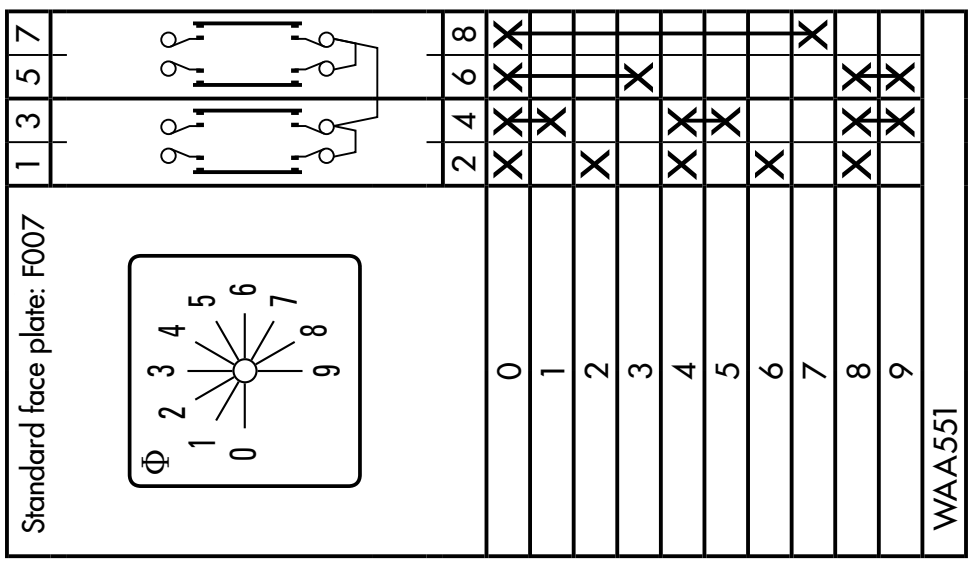


WAA551 0-9
(formerly A551)

# Motor Switches

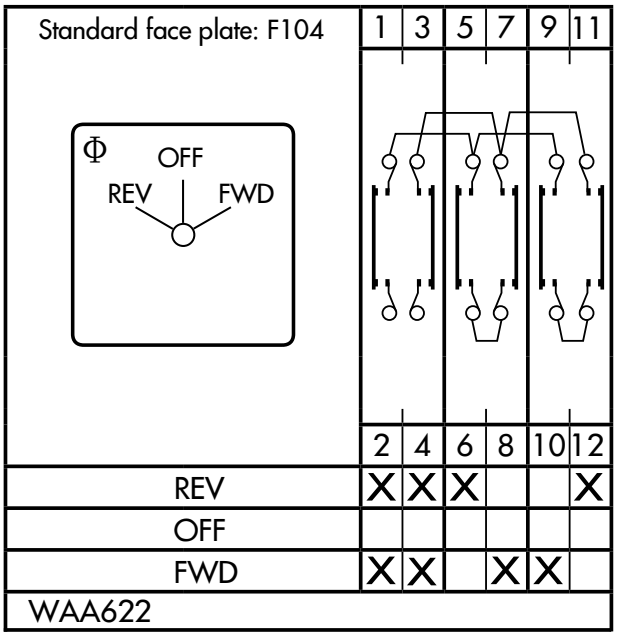


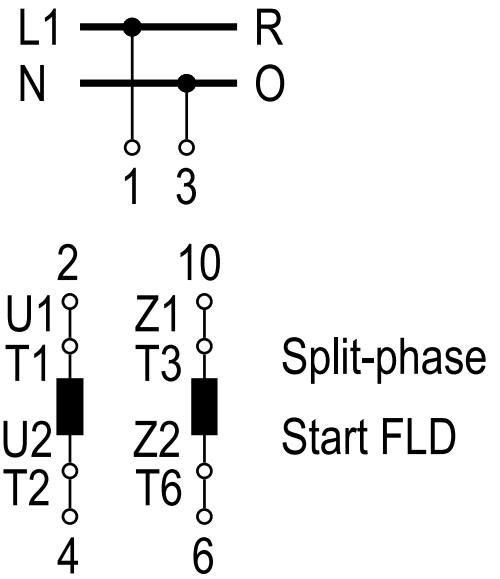


WAA622 (formerly A622) Start and Run Switch Split-phase reversing auto cutout of start field winding

# Double-throw Switches with electrically isolated contacts

Standard face plate: F071

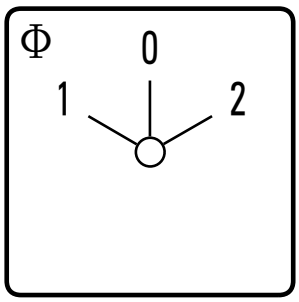


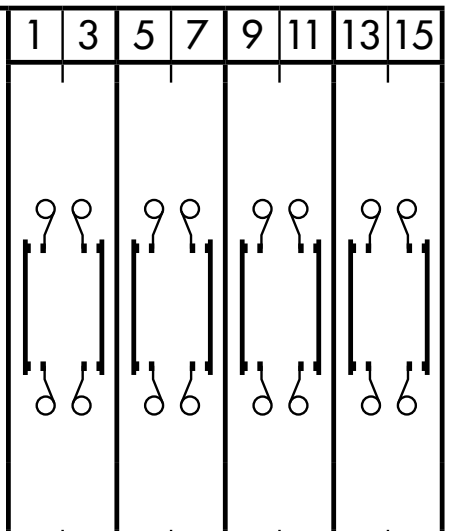

| | 1 | 3 | 5 | 7 | 9 | 11 | 13 | 15 |
|---|---|---|---|---|---|---|---|---|
| | 2 | 4 | 6 | 8 | 10 | 12 | 14 | 16 |
| 1 | | X | | X | | X | | X |
| 0 | | | | | | | | |
| 2 | X | | X | | X | | X | |

| | |
|---|---|
| A710 | 1 pole |
| A711 | 2 pole |
| A712 | 3 pole |
| A713 | 4 pole |

A710 up to A713 Double-throw Switch with „OFF“, 60° Switching

# Double-throw Switches with electrically isolated contacts

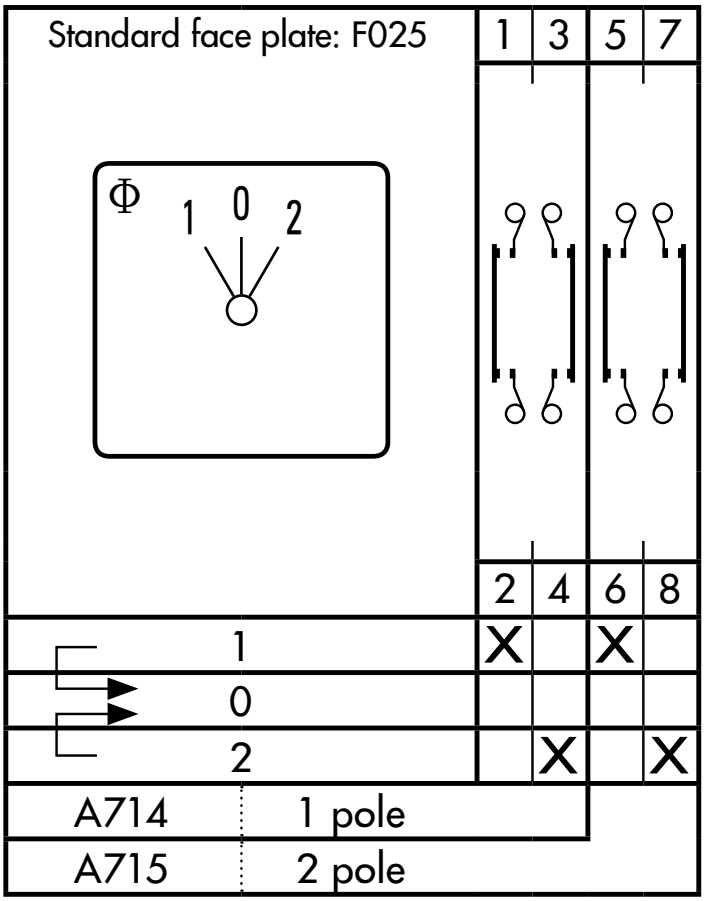


A714 up to A715 Double-throw Switch with „OFF“with spring return to center, 30° Switching

# Double-throw Switches with electrically isolated contacts

Standard face plate: F072

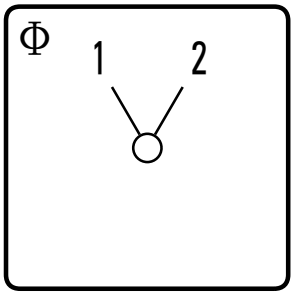


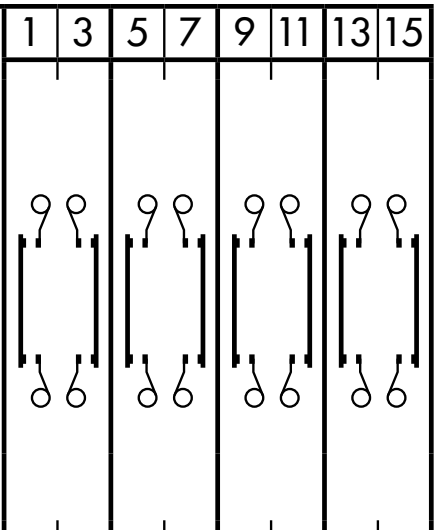

| | 1 | 3 | 5 | 7 | 9 | 11 | 13 | 15 |
|---|---|---|---|---|---|---|---|---|
| | 2 | 4 | 6 | 8 | 10 | 12 | 14 | 16 |
| 1 | X | | X | | X | | X | |
| | | | | | | | | |
| | | | | | | | | |
| | | | | | | | | |
| 2 | | X | | X | | X | | X |

| | |
|---|---|
| A720 | 1 pole |
| A721 | 2 pole |
| A722 | 3 pole |
| A723 | 4 pole |

A720 up to A723
Double-throw Switch without „OFF“,
60° Switching

# Multi-step Switch with electrically isolated contacts

Standard face plate: F076

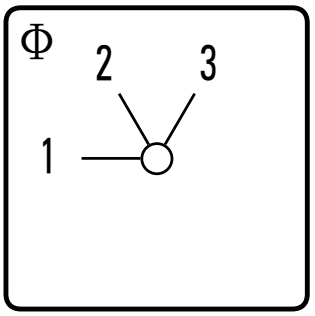


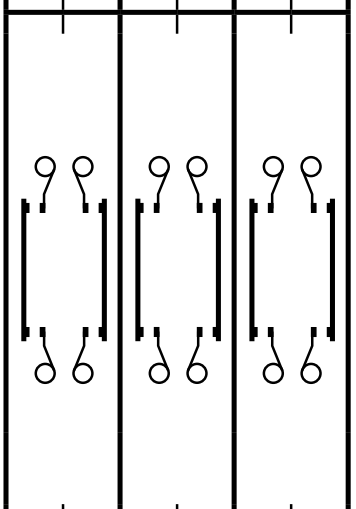

| | 1 | 3 | 5 | 7 | 9 | 11 |
|---|---|---|---|---|---|---|
| | 2 | 4 | 6 | 8 | 10 | 12 |
| 1 | X | | | | X | |
| | | | | | | |
| 2 | | X | | | | X |
| | | | | | | |
| 3 | | | X | X | | |

| | |
|---|---|
| A730 | 1 pole |
| A750 | 2 pole |

A730, A750
Multi-step Switch without „OFF“, 3 Positions

# Multi-step Switch with electrically isolated contacts

Standard face plate: F077

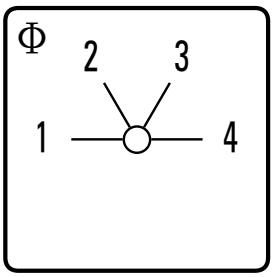


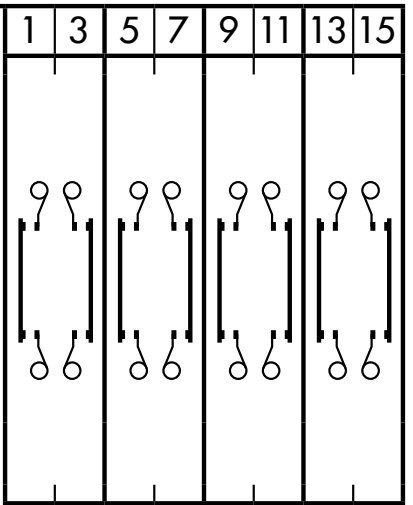

| | 1 | 3 | 5 | 7 | 9 | 11 | 13 | 15 |
|---|---|---|---|---|---|---|---|---|
| | 2 | 4 | 6 | 8 | 10 | 12 | 14 | 16 |
| 1 | X | | | | X | | | |
| | | | | | | | | |
| 2 | | | X | | | | X | |
| | | | | | | | | |
| 3 | | | | X | | | | X |
| | | | | | | | | |
| 4 | | X | | | | X | | |

| | |
|---|---|
| A731 | 1 pole |
| A751 | 2 pole |

A731, A751
Multi-step Switch without „OFF“, 4 Positions

# Control Switch with electrically isolated contacts

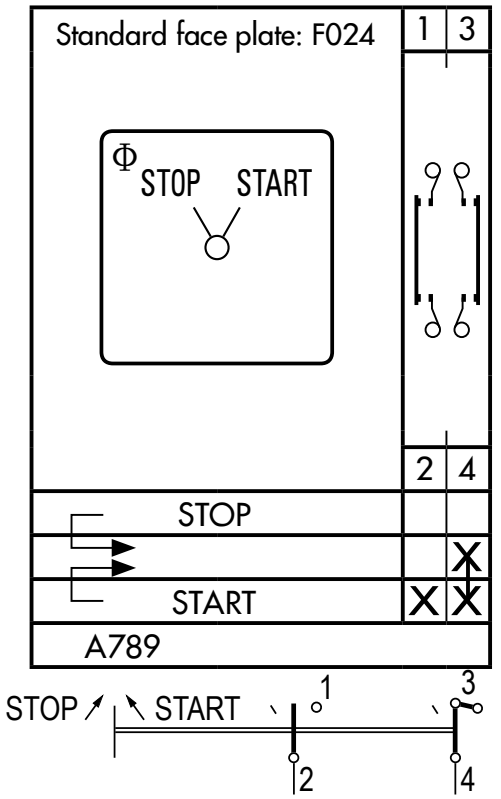


A789 Stop start switch

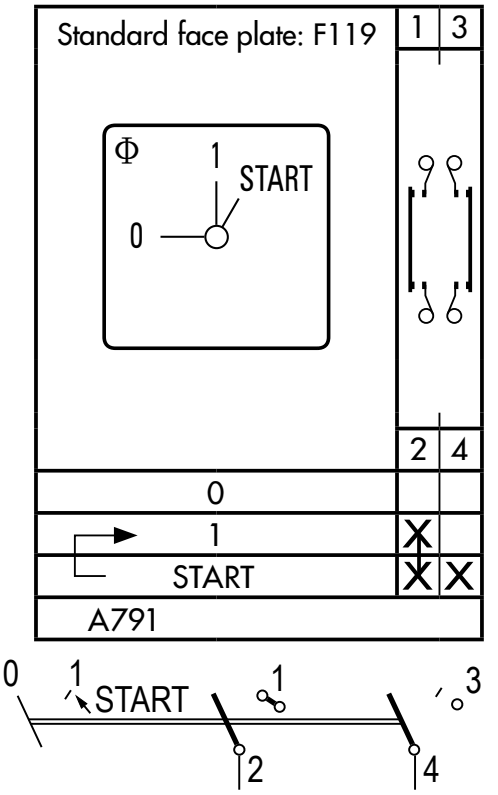


A791 Stop start switch with spring return from start to run

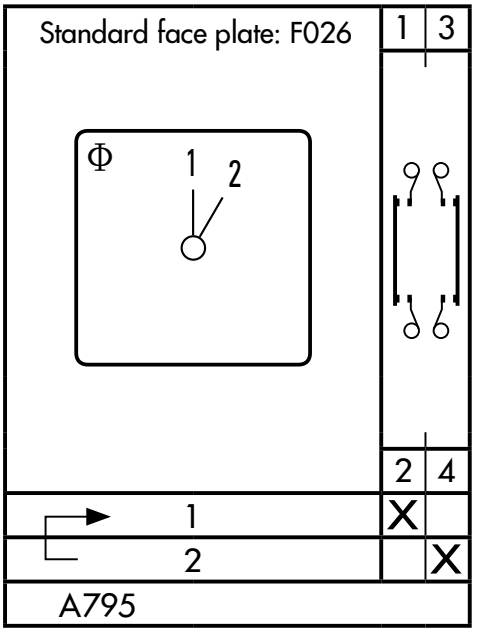


A795 Double-throw Switch without „OFF“, 1 pole with spring return

# Main Switches of KG-, KH- and KF-series

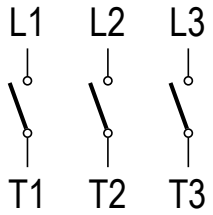


3 pole

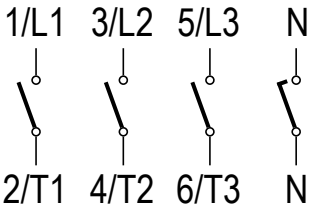


4 pole (3+N)

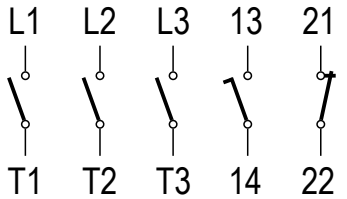


3 pole,1NO+1NC

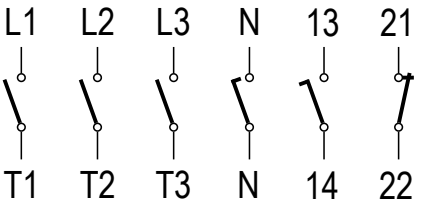


4 pole,1NO+1NC

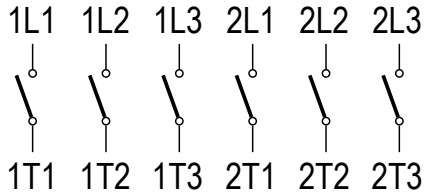


6 pole

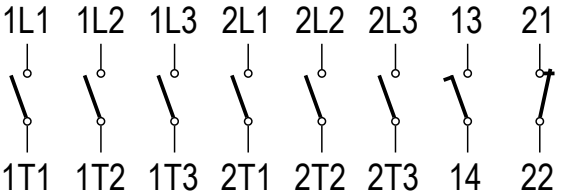


6 pole,1NO+1NC

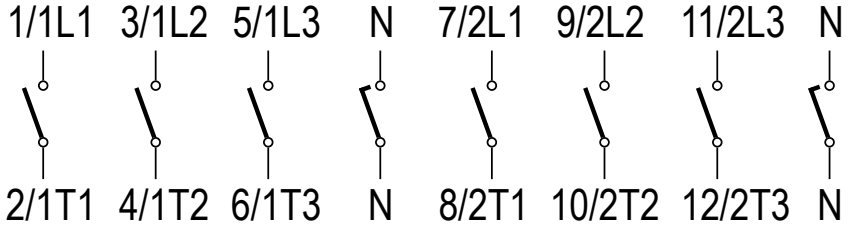


8 pole

# Double-throw Switches with „OFF“ of KG-, KH- and KF-series

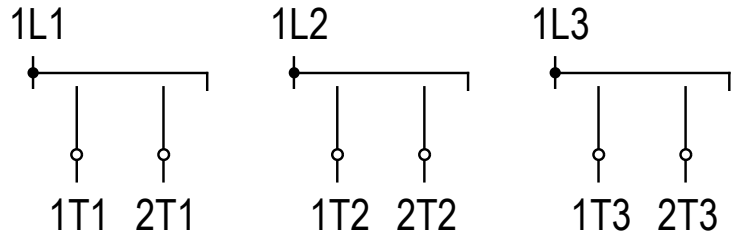


K900 3 pole

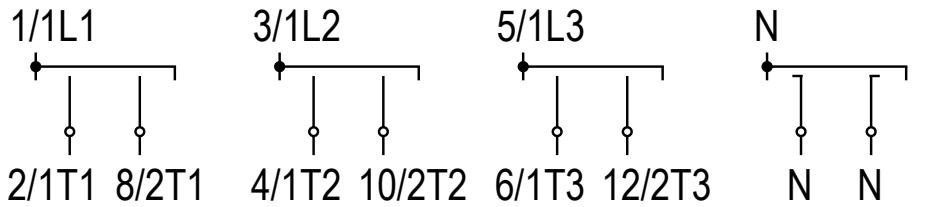


K950 4 pole

# Notes

# Notes

# Notes

Switch Wiring Diagrams as App:

Kraus & Naimer

www.krausnaimer.com

© Kraus & Naimer 4/2020