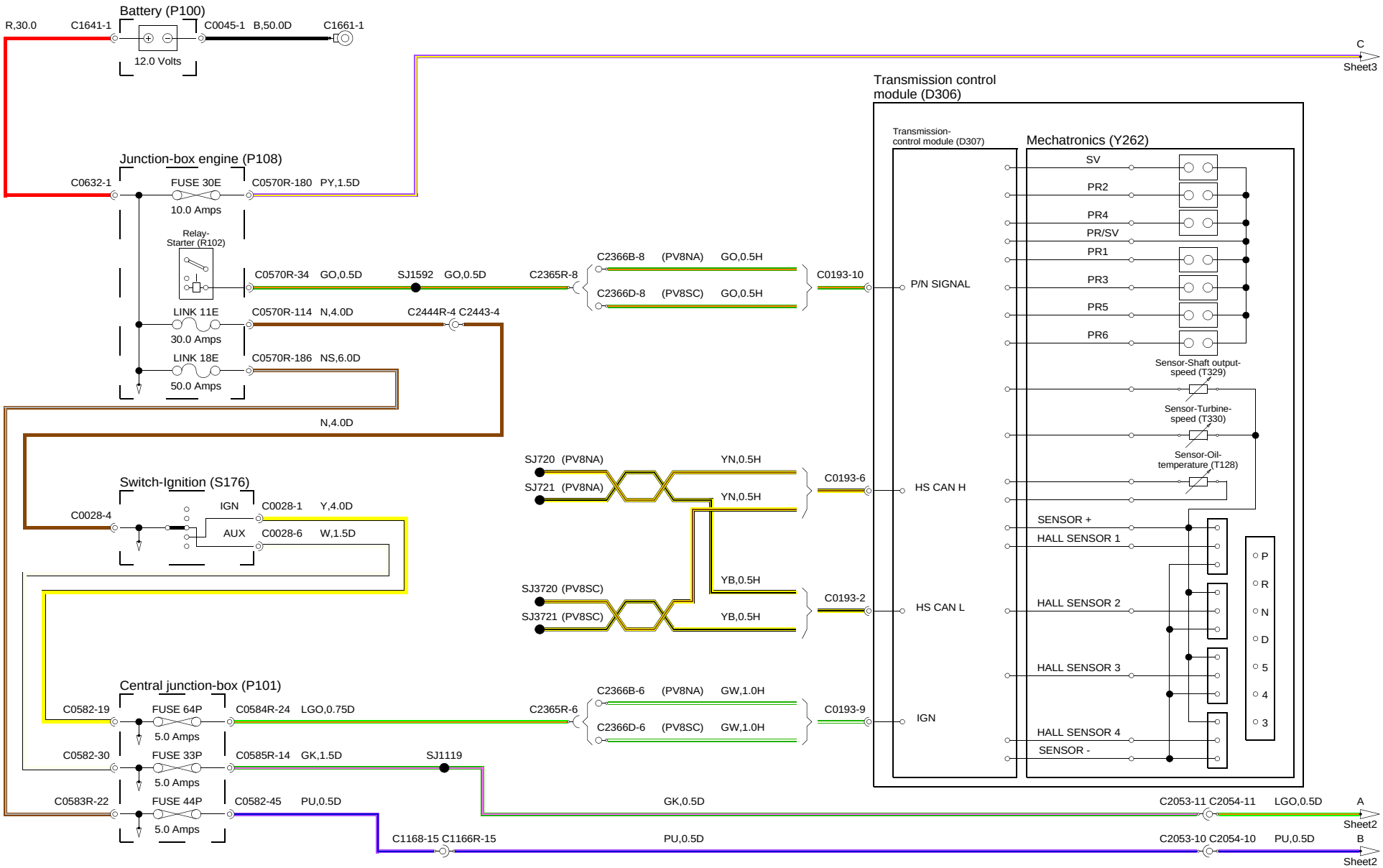
Battery (P100)
R,30.0
C1641-1
C0045-1 B,50.0D
C1661-1
12.0 Volts
C
Sheet3
Transmission control module (D306)
Transmission-control module (D307)
Mechatronics (Y262)
Junction-box engine (P108)
C0632-1
FUSE 30E
10.0 Amps
C0570R-180 PY,1.5D
Relay-Starter (R102)
C0570R-34 GO,0.5D
SJ1592 GO,0.5D
C2365R-8
C2366B-8 (PV8NA) GO,0.5H
C2366D-8 (PV8SC) GO,0.5H
C0193-10
P/N SIGNAL
LINK 11E
30.0 Amps
C0570R-114 N,4.0D
C2444R-4 C2443-4
LINK 18E
50.0 Amps
C0570R-186 NS,6.0D
N,4.0D
SV
PR2
PR4
PR/SV
PR1
PR3
PR5
PR6
Sensor-Shaft output-speed (T329)
Sensor-Turbine-speed (T330)
Sensor-Oil-temperature (T128)
SJ720 (PV8NA)
SJ721 (PV8NA)
YN,0.5H
YN,0.5H
C0193-6
HS CAN H
Switch-Ignition (S176)
C0028-4
IGN
C0028-1 Y,4.0D
AUX
C0028-6 W,1.5D
SENSOR +
HALL SENSOR 1
SJ3720 (PV8SC)
SJ3721 (PV8SC)
YB,0.5H
YB,0.5H
C0193-2
HS CAN L
HALL SENSOR 2
HALL SENSOR 3
P
R
N
D
5
4
3
Central junction-box (P101)
C0582-19
FUSE 64P
5.0 Amps
C0584R-24 LGO,0.75D
C2365R-6
C2366B-6 (PV8NA) GW,1.0H
C2366D-6 (PV8SC) GW,1.0H
C0193-9
IGN
C0582-30
FUSE 33P
5.0 Amps
C0585R-14 GK,1.5D
SJ1119
HALL SENSOR 4
SENSOR -
C0583R-22
FUSE 44P
5.0 Amps
C0582-45 PU,0.5D
GK,0.5D
C2053-11 C2054-11 LGO,0.5D
A
Sheet2
C1168-15 C1166R-15
PU,0.5D
C2053-10 C2054-10 PU,0.5D
B
Sheet2

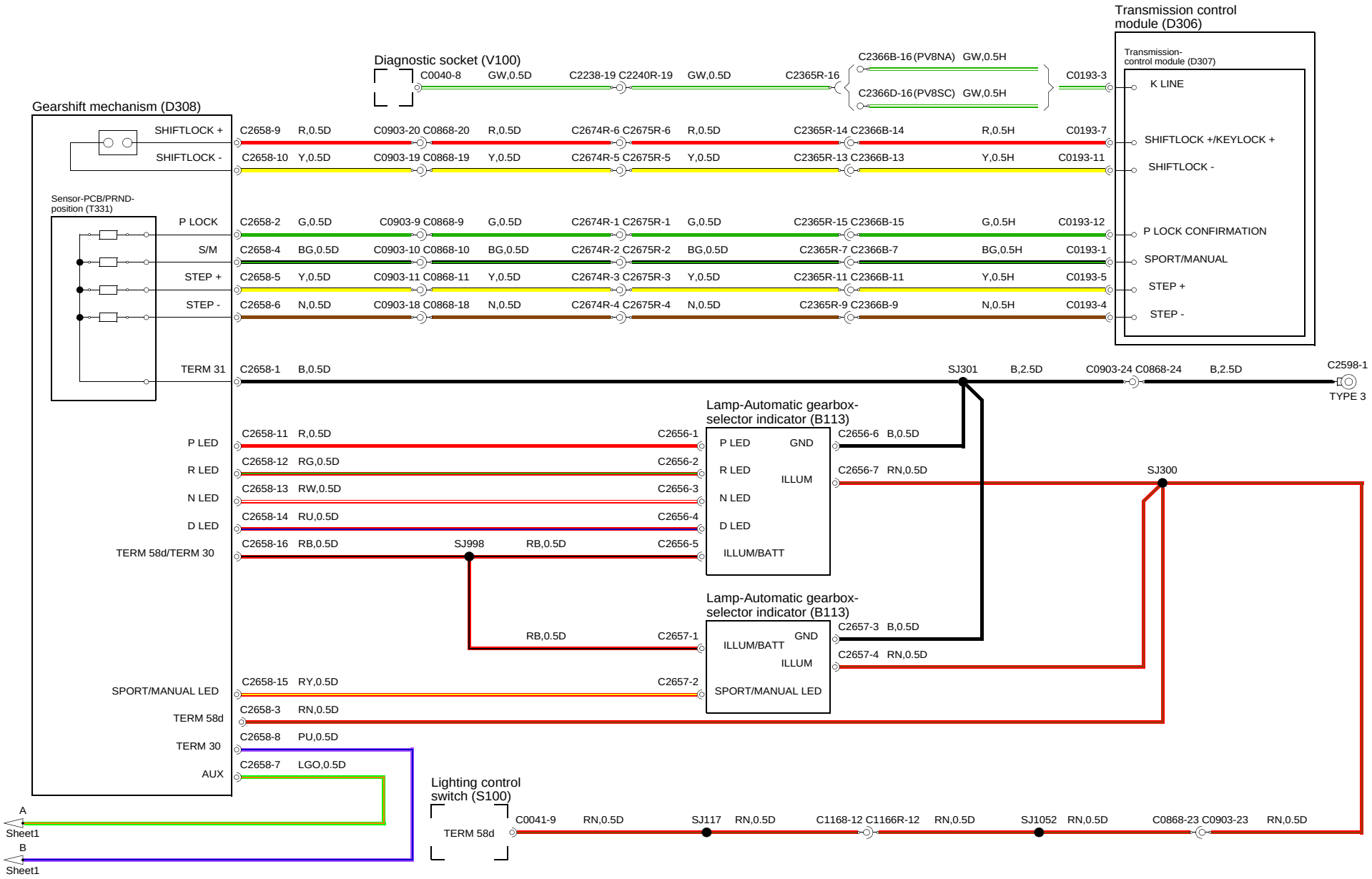
Transmission control module (D306)
Transmission-control module (D307)
K LINE
SHIFTLOCK +/KEYLOCK +
SHIFTLOCK -
P LOCK CONFIRMATION
SPORT/MANUAL
STEP +
STEP -
Diagnostic socket (V100)
C0040-8 GW,0.5D C2238-19 C2240R-19 GW,0.5D C2365R-16
C2366B-16 (PV8NA) GW,0.5H
C2366D-16 (PV8SC) GW,0.5H
C0193-3
Gearshift mechanism (D308)
SHIFTLOCK +
SHIFTLOCK -
C2658-9 R,0.5D C0903-20 C0868-20 R,0.5D C2674R-6 C2675R-6 R,0.5D C2365R-14 C2366B-14 R,0.5H C0193-7
C2658-10 Y,0.5D C0903-19 C0868-19 Y,0.5D C2674R-5 C2675R-5 Y,0.5D C2365R-13 C2366B-13 Y,0.5H C0193-11
Sensor-PCB/PRND-position (T331)
P LOCK
S/M
STEP +
STEP -
C2658-2 G,0.5D C0903-9 C0868-9 G,0.5D C2674R-1 C2675R-1 G,0.5D C2365R-15 C2366B-15 G,0.5H C0193-12
C2658-4 BG,0.5D C0903-10 C0868-10 BG,0.5D C2674R-2 C2675R-2 BG,0.5D C2365R-7 C2366B-7 BG,0.5H C0193-1
C2658-5 Y,0.5D C0903-11 C0868-11 Y,0.5D C2674R-3 C2675R-3 Y,0.5D C2365R-11 C2366B-11 Y,0.5H C0193-5
C2658-6 N,0.5D C0903-18 C0868-18 N,0.5D C2674R-4 C2675R-4 N,0.5D C2365R-9 C2366B-9 N,0.5H C0193-4
TERM 31
C2658-1 B,0.5D SJ301 B,2.5D C0903-24 C0868-24 B,2.5D C2598-1
TYPE 3
Lamp-Automatic gearbox-selector indicator (B113)
P LED
R LED
N LED
D LED
TERM 58d/TERM 30
C2658-11 R,0.5D C2656-1
C2658-12 RG,0.5D C2656-2
C2658-13 RW,0.5D C2656-3
C2658-14 RU,0.5D C2656-4
C2658-16 RB,0.5D SJ998 RB,0.5D C2656-5
P LED GND
R LED ILLUM
N LED
D LED
ILLUM/BATT
C2656-6 B,0.5D
C2656-7 RN,0.5D
SJ300
Lamp-Automatic gearbox-selector indicator (B113)
RB,0.5D C2657-1
ILLUM/BATT GND
ILLUM
SPORT/MANUAL LED
C2657-3 B,0.5D
C2657-4 RN,0.5D
SPORT/MANUAL LED
C2658-15 RY,0.5D C2657-2
TERM 58d
C2658-3 RN,0.5D
TERM 30
C2658-8 PU,0.5D
AUX
C2658-7 LGO,0.5D
Lighting control switch (S100)
TERM 58d
C0041-9 RN,0.5D SJ117 RN,0.5D C1168-12 C1166R-12 RN,0.5D SJ1052 RN,0.5D C0868-23 C0903-23 RN,0.5D
A
Sheet1
B
Sheet1

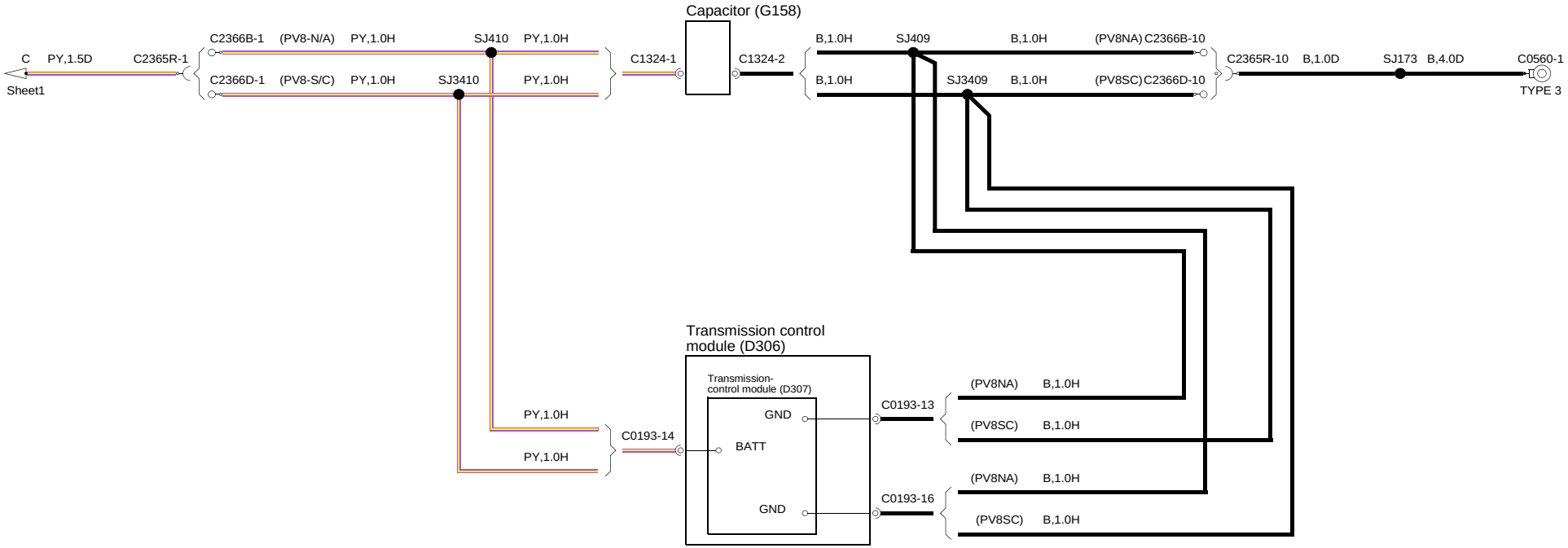
Capacitor (G158)
C
PY,1.5D
C2365R-1
Sheet1
C2366B-1
(PV8-N/A)
PY,1.0H
SJ410
PY,1.0H
C2366D-1
(PV8-S/C)
PY,1.0H
SJ3410
PY,1.0H
C1324-1
C1324-2
B,1.0H
SJ409
B,1.0H
(PV8NA)
C2366B-10
B,1.0H
SJ3409
B,1.0H
(PV8SC)
C2366D-10
C2365R-10
B,1.0D
SJ173
B,4.0D
C0560-1
TYPE 3
Transmission control module (D306)
Transmission-control module (D307)
GND
BATT
GND
PY,1.0H
PY,1.0H
C0193-14
C0193-13
C0193-16
(PV8NA)
B,1.0H
(PV8SC)
B,1.0H
(PV8NA)
B,1.0H
(PV8SC)
B,1.0H

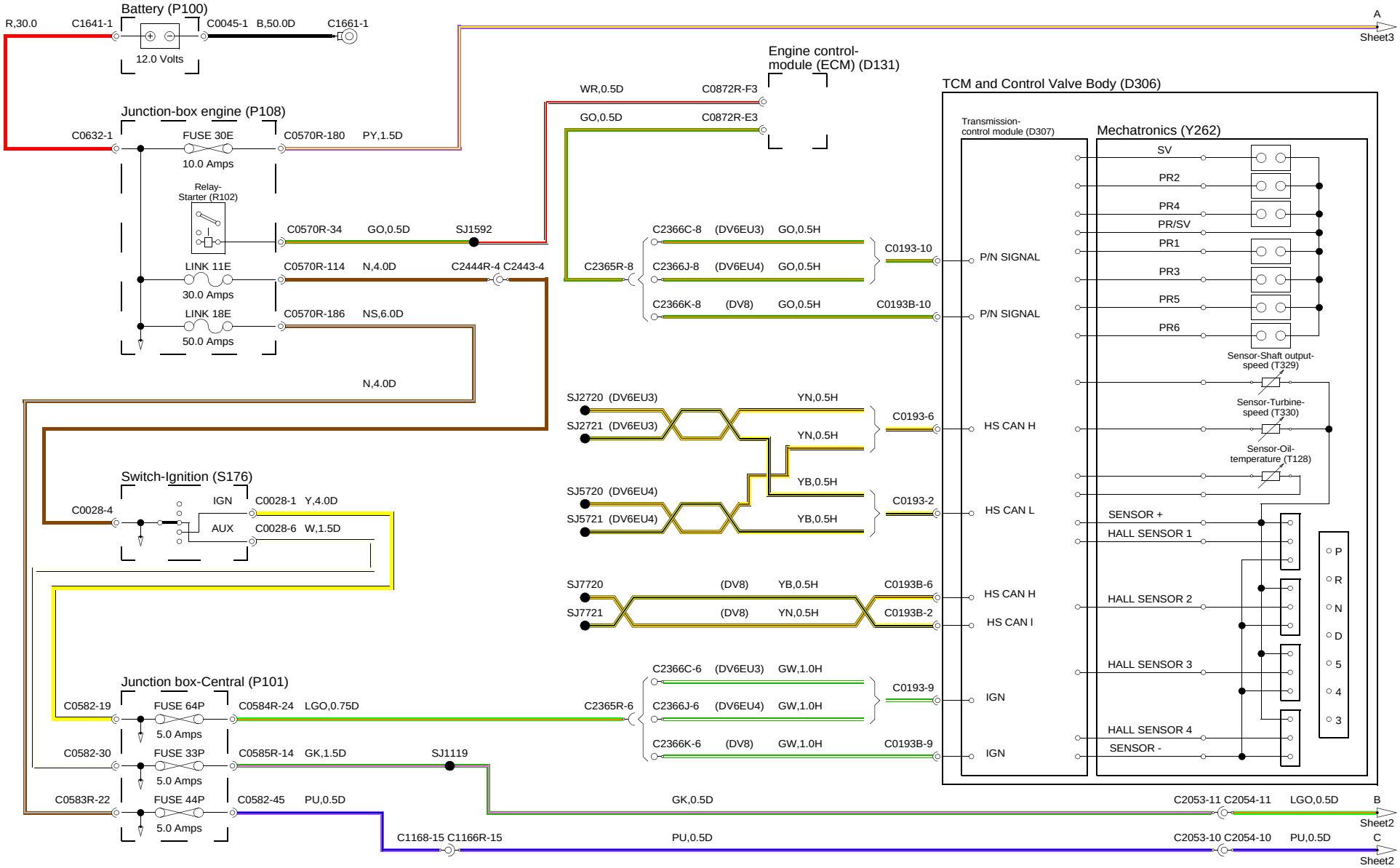
Battery (P100)
R,30.0
C1641-1
C0045-1 B,50.0D
C1661-1
12.0 Volts
A
Sheet3
Engine control-module (ECM) (D131)
WR,0.5D
C0872R-F3
GO,0.5D
C0872R-E3
TCM and Control Valve Body (D306)
Transmission-control module (D307)
Mechatronics (Y262)
Junction-box engine (P108)
C0632-1
FUSE 30E
10.0 Amps
C0570R-180 PY,1.5D
Relay-Starter (R102)
C0570R-34 GO,0.5D SJ1592
LINK 11E
30.0 Amps
C0570R-114 N,4.0D C2444R-4 C2443-4
LINK 18E
50.0 Amps
C0570R-186 NS,6.0D
N,4.0D
C2366C-8 (DV6EU3) GO,0.5H
C2365R-8
C2366J-8 (DV6EU4) GO,0.5H
C2366K-8 (DV8) GO,0.5H
C0193-10
C0193B-10
P/N SIGNAL
P/N SIGNAL
SV
PR2
PR4
PR/SV
PR1
PR3
PR5
PR6
Sensor-Shaft output-speed (T329)
Sensor-Turbine-speed (T330)
Sensor-Oil-temperature (T128)
SJ2720 (DV6EU3)
SJ2721 (DV6EU3)
YN,0.5H
YN,0.5H
C0193-6
HS CAN H
SJ5720 (DV6EU4)
SJ5721 (DV6EU4)
YB,0.5H
YB,0.5H
C0193-2
HS CAN L
Switch-Ignition (S176)
C0028-4
IGN
C0028-1 Y,4.0D
AUX
C0028-6 W,1.5D
SENSOR +
HALL SENSOR 1
SJ7720
SJ7721
(DV8) YB,0.5H
(DV8) YN,0.5H
C0193B-6
C0193B-2
HS CAN H
HS CAN I
HALL SENSOR 2
P
R
N
D
5
4
3
Junction box-Central (P101)
C0582-19
FUSE 64P
5.0 Amps
C0584R-24 LGO,0.75D
C2365R-6
C2366C-6 (DV6EU3) GW,1.0H
C2366J-6 (DV6EU4) GW,1.0H
C2366K-6 (DV8) GW,1.0H
C0193-9
C0193B-9
IGN
IGN
HALL SENSOR 3
HALL SENSOR 4
SENSOR -
C0582-30
FUSE 33P
5.0 Amps
C0585R-14 GK,1.5D
SJ1119
C0583R-22
FUSE 44P
5.0 Amps
C0582-45 PU,0.5D
GK,0.5D
C2053-11 C2054-11 LGO,0.5D
B
Sheet2
C1168-15 C1166R-15
PU,0.5D
C2053-10 C2054-10 PU,0.5D
C
Sheet2

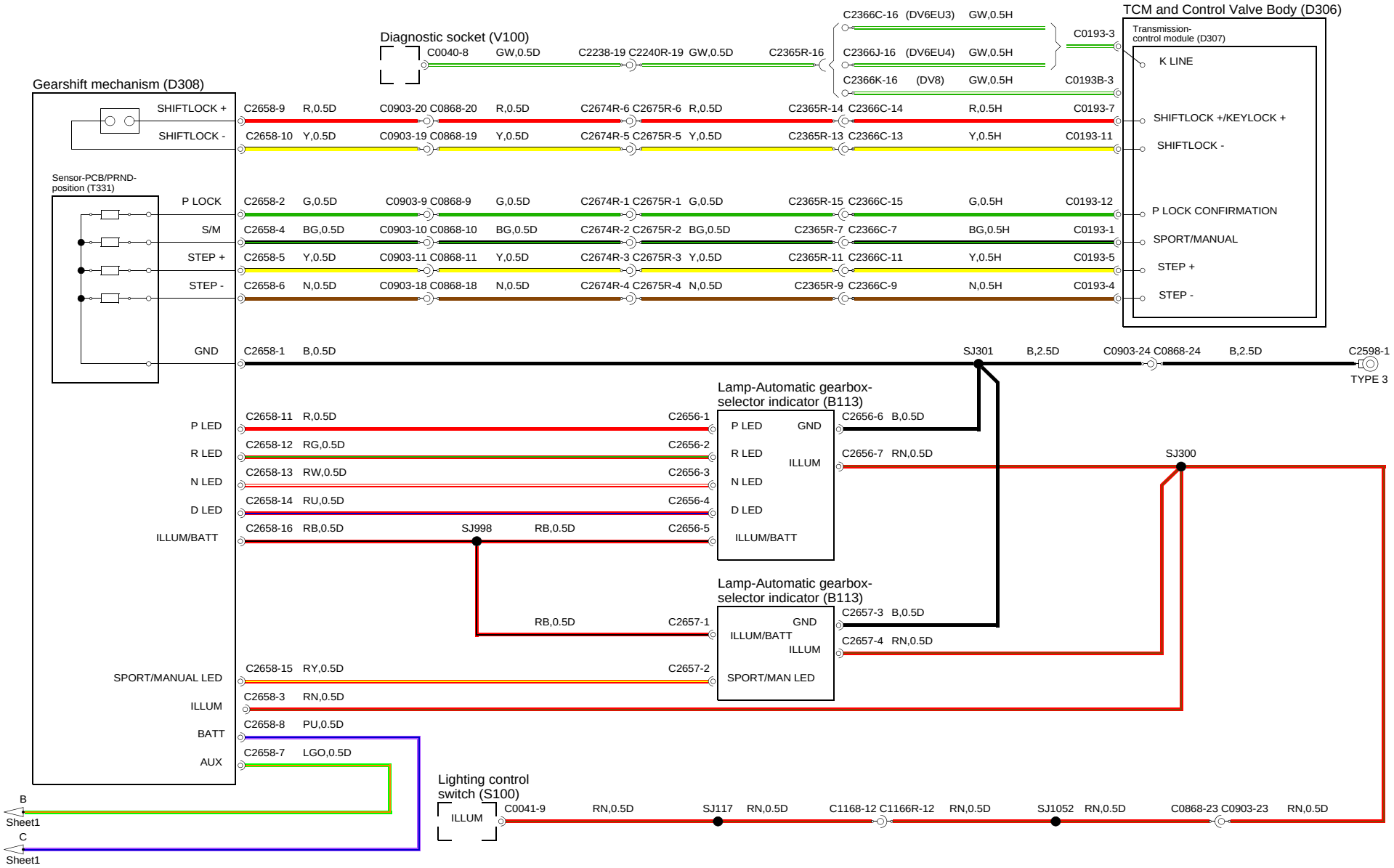
TCM and Control Valve Body (D306)
Transmission-control module (D307)
Diagnostic socket (V100)
Gearshift mechanism (D308)
Sensor-PCB/PRND-position (T331)
Lamp-Automatic gearbox-selector indicator (B113)
Lamp-Automatic gearbox-selector indicator (B113)
Lighting control switch (S100)
C2366C-16 (DV6EU3) GW,0.5H
C2366J-16 (DV6EU4) GW,0.5H
C2366K-16 (DV8) GW,0.5H
C0193-3
C0193B-3
K LINE
SHIFTLOCK +
SHIFTLOCK -
SHIFTLOCK +/KEYLOCK +
C2658-9 R,0.5D C0903-20 C0868-20 R,0.5D C2674R-6 C2675R-6 R,0.5D C2365R-14 C2366C-14 R,0.5H C0193-7
C2658-10 Y,0.5D C0903-19 C0868-19 Y,0.5D C2674R-5 C2675R-5 Y,0.5D C2365R-13 C2366C-13 Y,0.5H C0193-11
P LOCK
S/M
STEP +
STEP -
GND
P LOCK CONFIRMATION
SPORT/MANUAL
STEP +
STEP -
C2658-2 G,0.5D C0903-9 C0868-9 G,0.5D C2674R-1 C2675R-1 G,0.5D C2365R-15 C2366C-15 G,0.5H C0193-12
C2658-4 BG,0.5D C0903-10 C0868-10 BG,0.5D C2674R-2 C2675R-2 BG,0.5D C2365R-7 C2366C-7 BG,0.5H C0193-1
C2658-5 Y,0.5D C0903-11 C0868-11 Y,0.5D C2674R-3 C2675R-3 Y,0.5D C2365R-11 C2366C-11 Y,0.5H C0193-5
C2658-6 N,0.5D C0903-18 C0868-18 N,0.5D C2674R-4 C2675R-4 N,0.5D C2365R-9 C2366C-9 N,0.5H C0193-4
C2658-1 B,0.5D SJ301 B,2.5D C0903-24 C0868-24 B,2.5D C2598-1
TYPE 3
P LED
R LED
N LED
D LED
ILLUM/BATT
C2658-11 R,0.5D C2656-1
C2658-12 RG,0.5D C2656-2
C2658-13 RW,0.5D C2656-3
C2658-14 RU,0.5D C2656-4
C2658-16 RB,0.5D SJ998 RB,0.5D C2656-5
P LED GND
R LED ILLUM
N LED
D LED
ILLUM/BATT
C2656-6 B,0.5D
C2656-7 RN,0.5D
SJ300
RB,0.5D C2657-1
GND
ILLUM/BATT
ILLUM
C2657-3 B,0.5D
C2657-4 RN,0.5D
SPORT/MANUAL LED
ILLUM
BATT
AUX
C2658-15 RY,0.5D C2657-2
SPORT/MAN LED
C2658-3 RN,0.5D
C2658-8 PU,0.5D
C2658-7 LGO,0.5D
B
Sheet1
C
Sheet1
ILLUM
C0041-9 RN,0.5D SJ117 RN,0.5D C1168-12 C1166R-12 RN,0.5D SJ1052 RN,0.5D C0868-23 C0903-23 RN,0.5D

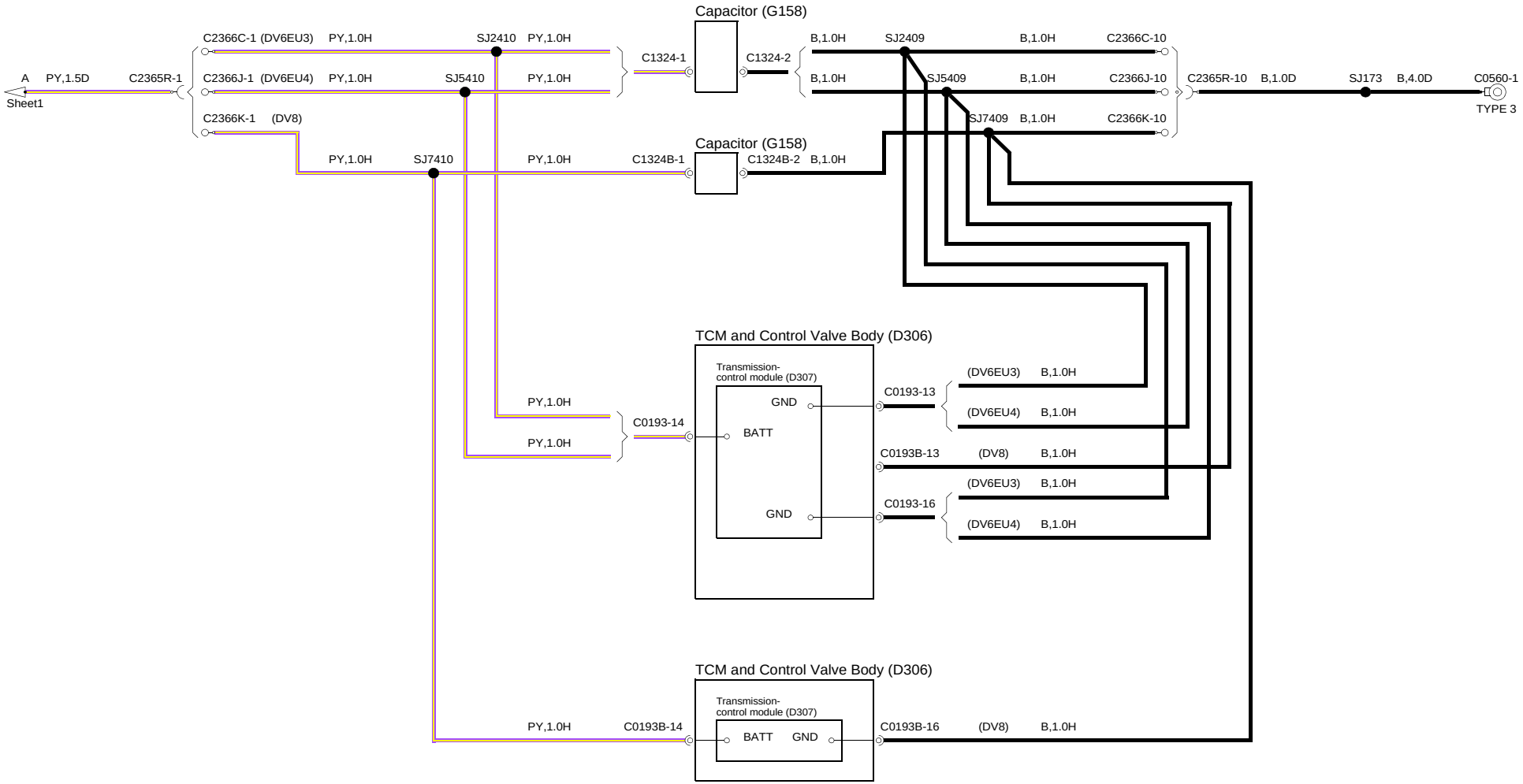
Capacitor (G158)
C2366C-1 (DV6EU3) PY,1.0H
SJ2410 PY,1.0H
C1324-1
C1324-2
B,1.0H
SJ2409
B,1.0H
C2366C-10
A PY,1.5D
C2365R-1
C2366J-1 (DV6EU4) PY,1.0H
SJ5410
PY,1.0H
B,1.0H
SJ5409
B,1.0H
C2366J-10
C2365R-10 B,1.0D
SJ173 B,4.0D
C0560-1
Sheet1
TYPE 3
C2366K-1 (DV8)
SJ7409 B,1.0H
C2366K-10
Capacitor (G158)
PY,1.0H
SJ7410
PY,1.0H
C1324B-1
C1324B-2 B,1.0H
TCM and Control Valve Body (D306)
Transmission-
control module (D307)
(DV6EU3) B,1.0H
PY,1.0H
GND
C0193-13
(DV6EU4) B,1.0H
C0193-14
BATT
PY,1.0H
C0193B-13 (DV8) B,1.0H
(DV6EU3) B,1.0H
C0193-16
GND
(DV6EU4) B,1.0H
TCM and Control Valve Body (D306)
Transmission-
control module (D307)
PY,1.0H
C0193B-14
BATT GND
C0193B-16 (DV8) B,1.0H